SYNTHETIC GROUND MOTIONS FOR THE DECEMBER 1989 NEWCASTLE EARTHQUAKE

VAUGHAN WESSON, PRINCIPAL SEISMOLOGIST, MAPPSCI
SEISMOLOGY RESEARCH CENTRE

ABSTRACT:

A suite of synthetic ground motion time histories has been developed to represent the motion experienced in the Newcastle area from the December 1989 Newcastle earthquake. The method is known as the Phase Spectrum Method and uses the phase spectrum from recordings of the aftershock and amplitude spectra derived from an attenuation function. The results obtained are generally comparable with those using other methods.

Paper No. 9

INTRODUCTION

The Newcastle earthquake of December 1989 caused damage to a number of engineered structures. For this reason, there is considerable interest in the level of ground shaking experienced by those structures. Unfortunately, no calibrated recordings of the strong ground motion were recorded in the city, the closest being over one hundred kilometres distant near Sydney. This study is one of a number that attempted to estimate the magnitude and character of the ground motion experienced in Newcastle.

The simplest techniques of ground motion estimation use existing attenuation functions to estimate the motion using only the magnitude of the earthquake and distance to the point of interest. Either peak ground motion, or spectral ground motion can be estimated in this manner.

The best estimates of the location and size of the main shock indicate a magnitude of approximately ML 5.6 at a depth of around 13 kilometres. The horizontal distance to points of interest in Newcastle is in the range 10 to 15 kilometres.

Using a range of ground motion attenuation functions [1,2,3,4,5,6,7], peak ground velocities of 145 mm/s to 175 mm/s and peak ground accelerations of 830 mm/s^2 to 2600 mm/s^2 are obtained for an earthquake of this magnitude and distance. We would anticipate that the true peak ground acceleration was towards the upper end of this range. It should be remembered that all these attenuation functions are for bedrock or "average" site conditions and it has been widely agreed [8,9,10,11] that the site conditions in many parts of Newcastle caused amplification of the seismic waves.

For many detailed engineering studies, a complete time history of ground motion is required rather just peak or spectral values. Therefore an attempt was made to synthesise the time history of ground motion experienced in Newcastle. A number of different techniques have been proposed over the years to do this. Each of these have advantages and disadvantages. This paper discusses a method which the author calls the Phase Spectrum Method (PSM). A companion paper describes the Greens Function or superposition method.

THE PHASE SPECTRUM METHOD

The Phase Spectrum method for producing synthetic accelerograms has been developed independently by a number of workers including the author [12,13].This method requires an understanding of the Fourier transform.

The Fourier transform of a time domain signal is a frequency domain signal. It is complex valued and may be considered in either its real and imaginary components or its amplitude and phase components. For this study the representation used is amplitude and phase. The amplitude spectrum represents the amount of signal present at the given frequency, while the phase spectrum defines when that energy is present.

The Phase Spectrum

The ground motion recorded at a site depends on three independent factors: the earthquake source, the transmission path, and the site effects. The basis of the PSM is that the phase spectrum only depends on one of these - the transmission path. The PSM assumes that the effects of the transmission path as recorded in one earthquake will be the same in another earthquake occurring at the same location. Once this has been determined, it may be used for other earthquakes occurring in the same place. This means that the phase spectrum recorded from an aftershock of the December 1989 earthquake may be used to represent the phase spectrum of the main shock.

The Amplitude Spectrum

The amplitude spectrum of the Fourier transform is affected by all three of the factors mentioned above: source, transmission path and site. A number of empirical functions have been determined to describe this variation. They give the Fourier amplitude (not phase) at a range of frequencies as a function of the earthquake magnitude, source to site distance and site conditions. This empirical function can be used together with a measured phase spectrum to produce a complete Fourier spectrum that is transformed back to the time domain to produce a synthetic accelerogram. This is the basis of the PSM.

The influence of the site can be catered for in two ways. In the first method, the empirical function itself may have a parameter that can be used to specify, in a very general manner, whether the site is rock or alluvial. In the second method, it is possible to explicitly modify the amplitude spectrum produced by the empirical function before it is combined with the phase spectrum.

THE TECHNIQUE USED

A suite of synthetic accelerograms has been produced for the Newcastle area using PSM. A number of different parameters or methods are involved in the production of each synthetic and this leads to the suite produced. The parameters are:

Empirical attenuation function

Two different functions are used. One produced by Trifunac in 1976 [14] and one by McGuire in 1978 [15].

Site effect consideration

The site effect may be taken in to consideration using the empirical function parameter or by applying an amplification to a section of the (bedrock) spectrum. The spectral amplifications applied here are a peak factor of two, four, six or eight using a raised cosine curve between 0.6 and 3.0 hertz with its peak at 1.8 hertz. As will be seen, the results show that the peak acceleration is amplified by much smaller amounts than the spectral amplitude.

Phase spectrum source

The phase spectra being used are from recordings of the aftershock made on the portable seismographs installed after the main shock in December 1989. The sites at which we have recordings are:

CLB	The BHP Recreation Club
HCG	Hillsborough-Charlestown Golf Club
KON	Kooragang Island
MOS	Near the Rankin Park Hospital
UNI	Newcastle University

Synthetics were produced using the phase spectrum from each of the CLB, KON, MOS and UNI recordings for comparison. The HCG site was much closer to the earthquake and was not considered appropriate to use in this case.

Random variation of amplitude spectrum

The empirical functions produce an amplitude spectrum that is a smooth function of frequency. Amplitude spectra of actual seismograms and accelerograms have a considerable random component superimposed on a smooth spectrum. This has been modelled by computing each spectral amplitude using a log-normal distribution with a standard deviation of 0%, 20% and 50% of the original spectral estimate.

RESULTS

If all the combinations of parameters mentioned above were included, there would be a very large number of different synthetic accelerograms. We have chosen representative values for each parameter and then varied each in turn. The results are summarised in the tables below and Figure 1 shows a typical synthetic time series.

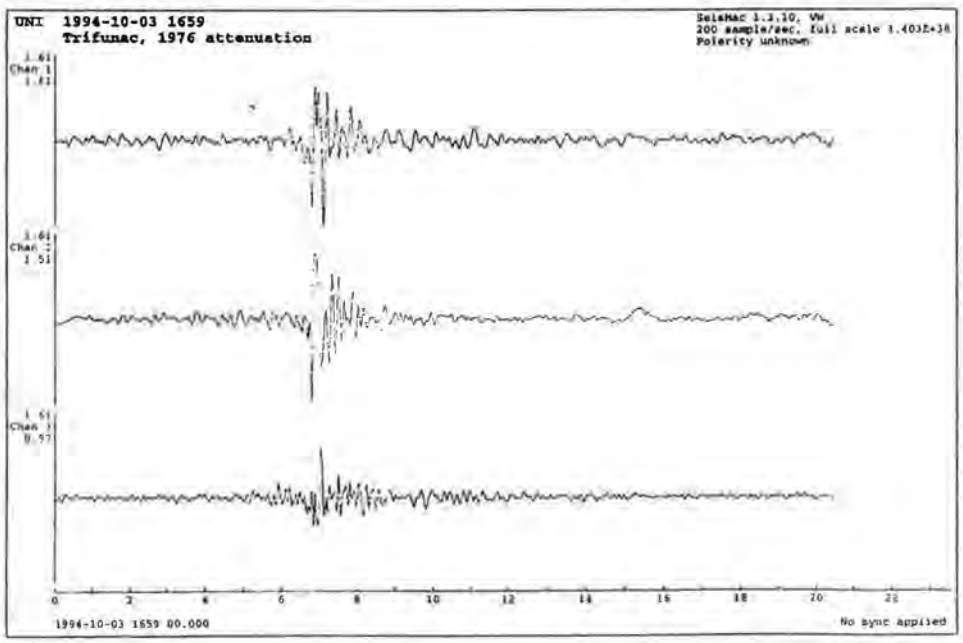

Figure 1 - Typical Synthetic Time Series

For purposes of tabulation, only the peak ground acceleration has been presented. However, we do not believe it is a good indicator of damage potential of the accelerogram.

The tables below indicate the peak (horizontal) amplitude for some of the synthetic accelerograms produced. Each table corresponds to the variation of one of the parameters described in the previous section.

Table 1 shows the comparison between the two attenuation functions using a variety of phase spectra and site conditions. It shows that the functions give identical values for bedrock motion and that the Trifunac function gives values about 35% higher for alluvium.

Attenuation Function	Phase Spectrum Source	Site Condition	Peak Acceleration (g)
Trifunac	CLB	"Alluvium"	0.23
McGuire	CLB	"Alluvium"	0.17
Trifunac	KON	"Alluvium"	0.19
McGuire	KON	"Alluvium"	0.14
Trifunac	CLB	"Bedrock"	0.21
McGuire	CLB	"Bedrock"	0.21
Trifunac	KON	"Bedrock"	0.18
McGuire	KON	"Bedrock"	0.18

Table 1 - Variation Due to Attenuation Function

Table 2 shows the result of the various methods for considering site conditions. The amplification referred to in the table is spectral amplification at a narrow range of frequencies between 0.6 and 3.0 hertz peaking at 1.8 hertz. It shows that the peak motion is higher on alluvium than on bedrock as expected. It also shows that if one increases the spectral amplification, the peak ground motion also increases but to a much lesser extent.

Site Condition	Peak Acceleration (g)
"Alluvium"	0.23
"Intermediate"	0.22
"Bedrock"	0.21
Bedrock with amp of 2.0	0.23
Bedrock with amp of 4.0	0.25
Bedrock with amp of 6.0	0.26
Bedrock with amp of 8.0	0.26

Table 2 - Variation in Site Condition

Table 3 shows the variation due to different phase spectra for both the McGuire and Trifunac attenuation functions, assuming alluvial site conditions. It shows that this leads to a variation in peak amplitudes of about 25%.

Attenuation Function	Phase Spectrum Source	Peak Acceleration (g)
Trifunac	CLB	0.23
Trifunac	KON	0.19
Trifunac	MOS	0.24
Trifunac	UNI	0.20
McGuire	CLB	0.17
McGuire	KON	0.14
McGuire	MOS	0.18
McGuire	UNI	0.15

Table 3 - Variation in Phase Spectrum

Table 4 shows the variation caused by the addition of a pseudo-random signal to the amplitude spectra. This shows that adding such noise increases the peak amplitude of the time series produced by up to 20%.

Attenuation Function	Phase Spectrum Source	Pseudo-random Noise Amplitude (%)	Peak Acceleration (g)
Trifunac	CLB	0	0.23
Trifunac	CLB	20	0.24
Trifunac	CLB	50	0.27
Trifunac	KON	0	0.19
Trifunac	KON	20	0.20
Trifunac	KON	50	0.23
McGuire	CLB	0	0.17
McGuire	CLB	20	0.17
McGuire	CLB	50	0.20
McGuire	KON	0	0.14
McGuire	KON	20	0.14
McGuire	KON	50	0.16

Table 4 - Variation Due to Additive Random Signal

DISCUSSION ON SITE AMPLIFICATION

In the literature on site effects in general, and regarding the Newcastle earthquake in particular, there is confusion between spectral amplification and time series amplification.

Spectral amplification is the amplification of a particular frequency or band of frequencies. This is most easily seen and analysed using the Fourier amplitude spectrum. On the other hand, time series amplification is usually used to indicate the ratio of the peak amplitude of two time series. While these two types of amplification are related, they are most certainly not the same thing.

This can be seen from Table 2. The peak acceleration of the time series using a straight "bedrock" spectrum is 0.21g. If a spectral amplification of 4.0 at a narrow range of frequencies around 1.8 hertz is applied to this spectrum, the peak acceleration of the time series only increases to 0.25g, that is a factor of 1.2 (not 4.0).

The confusion between the two types of amplification is partially responsible for the widely varying values quoted for amplification at various sites in Newcastle (by the author as well as others). In summary, we are suggesting that a peak spectral amplification of a factor of four or six is not unreasonable. However, this only leads to amplification in the peak amplitude of the time series by a factor of about 1.25. If however, a structure on the site had a natural period near the sites natural period, its response will be high because of the amplification in ground motion at this frequency.

CONCLUSION

Using the most appropriate parameters, sixteen accelerograms designed to represent the December 1989 Newcastle earthquake were produced using the PSM. They yielded a mean peak ground acceleration of 0.23g.

Even relatively high spectral amplification at certain frequencies does not lead to high peak ground acceleration amplification. In the case presented here peak spectral amplification by a factor of eight at 1.8 hertz only lead to amplification by a factor of 1.25 in peak acceleration.

The synthetic accelerograms produced by this study are available in digital form for use in computer studies.

---

[1] Esteva, L. & E.Rosenblueth (1964). "Expectros de temblores a distancias moderados y grandes", *Bolotin Sociedad Mexicana de Ingenieria Seismica*, Vol 2, pp 1-18.

[2] Esteva, L. (1974). "Geology and probability in the assessment of seismic risk", *Proceedings of the 2nd International Congress of the International Association of Engineering Geologists*, Brazil, August 1974.

[3] Campbell, K.W. (1981). "Near-source attenuation of peak horizontal acceleration", *Bulletin of the Seismological Society of America*, Vol 71, pp 2039-2070.

[4] Joyner, W.B., D.M.Boore & R.C.Porcella (1981) "Peak horizontal acceleration and velocity from strong motion records including records from the 1979 Imperial Valley, California, earthquake", *US Geological Survey, Open-File report*, 81-365.

[5] Underwood, R. (1985). Reported in Denham, D., G.M.Gibson, R.S.Smith & R.Underwood (1985). "Source mechanisms and strong ground motion from the 1982 Wonnangatta and 1966 Mount Hotham earthquakes", *Australian Journal of Earth Sciences*. Vol 32, pp 37-46.

[6] Rynn, J.M.W. (1989). "Commentary on seismic risk estimates and related uncertainties for northeastern Australia", *The University of Queensland, Special Paper*, 1989.

[7] Gaull, B., M.Michael-Leiba, J.Rynn (1990). "Probabilistic earthquake risk maps of Australia", *Australian Journal of Earth Sciences*, Vol 37, pp 159-187.

[8] IEAust (1990a): "Proceedings of the Conference on the Newcastle Earthquake, 15-17 February 1990".

[9] IEAust (1990b). "The Institution of Engineers, Australia - Newcastle Earthquake Study". IEAust, March 1990.

[10] Poulos, H.G. (1991). "Relationship between local soil conditions and structural damage in the 1989 Newcastle earthquake", *Australian Civil Engineering Transactions*, CE33, 3, pp 181-188.

[11] EEFIT (1991) "The 1989 Newcastle Australian Earthquake, a Field Report by EEFIT (Earthquake Engineering Field Investigation Team)", *Institution of Structural Engineers (UK)*, March 1991.

[12] Watabe, M., R.Iwasaki, M.Tohdo & I.Ohkawa (1980). "Simulation of Three-Dimensional Earthquake Ground Motions Along Principal Axes". *Proceedings of the Seventh World Conference on Earthquake Engineering, Turkey*, 1980.

[13] Gibson, G.M. (1993). "Artificial Ground Motions: Earthquake Engineering and Disaster Reduction". *Proceedings of a seminar held by the Australian Earthquake Engineering Society*, October 1993.

[14] Trifunac, M.D. (1980). "Effects of Site Geology on Amplitudes of Strong Motion", *Proc. 7th World Conf. on Earthquake Eng., Istanbul*, Vol 2, pp 145-152

[15] McGuire, R.K. (1978). "A simple model for estimating Fourier amplitude spectra of horizontal ground acceleration". *Bulletin of the Seismological Society of America*, Vol 68, No 3, pp 803-822, June 1978.

A REVIEW OF THE DESIGN OF NON STRUCTURAL COMPONENTS IN BUILDINGS FOR EARTHQUAKE LOADS

JOHN W. WOODSIDE, MENGSC FIEAUST, CONNELL WAGNER PTY LTD

After postgraduate work at Melbourne University, John worked in Melbourne for 4 years with Milton Johnson and Assoc. before travelling to the UK where he worked for 4 years on a major building project in London for Taylor Woodrow Construction. Returning to Australia in late 1975 he commenced work with Connell Wagner in 1976 in Melbourne and has been with them since that time. He has specialised, and is widely experienced, in structural design of buildings. He went to Kuwait in 1976 for a specific project and on return transferred to Connell Wagner in Adelaide in 1977. He is chairman of the Standards Australia Sub-Committee responsible for the preparation of the Earthquake Loading Code AS1170.4 and also is on the Concrete Code Committee.

ABSTRACT:

Since the publication of AS1170.4 in 1993 and the subsequent adoption of AS1170.4 in the BCA in late 1994 or the start of 1995, structural engineers throughout Australia have progressively become acquainted with the requirements and use of the earthquake loading code AS1170.4 to design new buildings. This design experience has now been in place for over one and a half years and is now part of the accepted design requirements. Over the next five years it will become normal and accepted design requirements for all design professional.

Section five of the code requires non structural components to be designed for earthquake loads. This section is still causing problems as designers appear to be ignoring the requirements in some cases or not understanding the significance of this section of the code.

This paper explores some of the issues and problems with this section 5 based on the author's personal experiences in designing such non structural components. It considers what can be done to make designers other than structural engineers, aware of their responsibility and how they can be helped in this area.

1.0 INTRODUCTION

Since the publication of AS 1170.4 ([1], [2]) in 1993 and the subsequent adoption of AS 1170.4 in the BCA in late 1994 or the start of 1995, structural engineers throughout Australia have progressively become acquainted with the requirements and use of the earthquake loading code of AS 1170.4 to design new buildings. This design experience has now been in place for over one and a half years and is now part of the accepted design requirements. Over the next five years it will become normal and accepted design requirements for all design professional.

Section five of the code, requiring non structural components to be designed for earthquake load is still causing problems as designers appear to be ignoring the requirements in some cases or not understanding the significance of this section of the code.

This paper explores some of the issues and problems with this section 5 based on the authors personal experiences in designing such non structural components and what can be done to make designers other than structural engineers, aware of their responsibility, and how they can be helped in this area.

2.0 AS 2121

Section seven of AS 2121[3], (Australia's first earthquake and published in 1979), provided guidance on the minimum earthquake forces for parts of building. The code stated "Much larger forces (proportionally) are required to be resisted by appendages or on parts of buildings than are required to be resisted by the building as a whole. This is to ensure that failure of parts should not occur before that of the building as whole _____".

Section seven covered various parts of buildings including walls, parapets, tower tanks, storage racks, equipment and machinery, connections and ceiling systems.

Unfortunately because of the limited use of AS 2121 in Australia, these requirements where rarely applied and often ignored in the design of buildings in Australia, except in some high rise buildings in Adelaide.

3.0 BACKGROUND

3.1 General

Experience both overseas and in Australia including Meckening, Adelaide and Newcastle, has clearly shown the damage and effects non-structural components of buildings in the event of an earthquake. The damage caused by the collapse of walls, racking, ceilings and failure of ceilings, building services etc, is well documented. Often the damages from water, or fire can result in significant damage to larger buildings, sometimes exceeding the structural damage or the original cost of construction.

It can also lead to loss of life. In some cases, if the contents of the building are greater than the building cost, these issues should have greater prominence in the design process.

These matters are also referred to the NZ Earthquake Commission Report by Massey and Megget (5).

Often significant damage and cost can be attributed to these failures and for these reasons, design of these elements are an important part of the design process. Some elements such as precast walling and curtain walls and the like usually are designed by structural engineers responsible for the building frame. Other elements such as water tanks, boilers, air-condition equipment, internal walling, ceiling etc are often not designed because the responsibility for the design is not properly understood by those who are not structural engineers.

3.2 AS 1170.4

Section five of AS 1170.4 set out the requirements for non-structural components. This section covers all buildings except domestic structures and includes architectural, mechanical and electrical components.

By careful choice of systems and the appropriate support points for services such as pipework and similar, design is often not required or limited for many building. Nevertheless designers need to consider this section of the code carefully in their design. When preparing this section of the code, the code sub-committee hoped that much of the detail would be covered by "deemed to comply detail", and the like produced by appropriate industry group, following the publication of the code. To date, this has unfortunately not occurred.

4.0 REVIEW OF PROJECTS WITH NON-STRUCTURAL COMPONENTS

The following section of this paper set out three projects in Adelaide where Section five of AS 1170.4 has been applied to the design of non-structural components for these projects.

On all significant projects in this office, the author of this paper reviews the design criteria for the project early in the project and on this basis advises not only his staff but the architect, the building services engineers, and others of the design team of their responsibility in regard to the design to the Earthquake Code. A copy of a typical letter is incorporated in Appendix A to this paper setting out these general requirements.

The three projects reviewed in this paper are:

- Flinder Major Communication Building for Telstra in Adelaide.
- City West Campus for the University of Adelaide.
- Advice to a national Lift Contractor on design of lifts to section five.

4.1 Flinders Major Communication Building

This building was completed in 1992 and is a five storey building in Flinders Street, Adelaide. It is the major telephone exchange and communication building for Telstra in South Australia, and as such, is a Type III structure, that is essential for post earthquake recovery. While the building was designed in accordance with AS 2121, it was also checked against then current draft of AS 1170.4. Equipment placed in the building since its completion has been designed to AS 1170.4.

The building was constructed at a cost of about $40 million, but houses over $300 million worth of sophisticated switching equipment, battery racks, emergency generators, lifts, air conditioning, sprinklers, electrical and other equipment. It is designed to operate for up to a week with emergency generators.

In addition, to specific design requirement for the main Contract, Connell Wagner also assisted at least two sub contractors meet their design requirements and in the setting design criteria for Telstra. These included:

- Sprinkler pipes, fire pumps and storage tanks for the fire contractor.
- Electrical risers and switchboards for the electrical subcontractor.
- Assistance to Telstra in support of the switching equipment, installed after the building was completed.

4.2 City West Campus

This major building project is nearing completion in North Terrace. The $50 million project has eight, four storey building, providing the usual requirements of a University, including offices, library, lecture theatres, tutorial and teaching areas, cafeteria etc.

Again Section five of AS 1170.4 was applied to this building. This included the building services, ceilings, lightweight partitions and the like. The ceiling contractors were required to design the ceilings for lateral loads including the lightweight partitions supported at the top from the ceilings. These elements required bracing to the structure over. Where services run between the building, allowance has been made for different interstorey sway of the buildings.

4.3 Lift Manufacturer

A major lift supplier approached us to assist them in ensuring this equipment met the requirements of Section five of AS 1170.4 on a national basis.

Our work included a review of the calculations and meeting with the supplier to assist them in understanding their requirements. We found that limit state loads as set out in the earthquake code were not consistent with the working stress design of the required lift code. Lift cars and counter weights can slip out of the guide rails in severe earthquake events. This is referred to in Section 6.6.9 of the Australian Earthquake Engineering Manual (6).

5.0 CONCLUSIONS

What is become clear is that many designers are unaware of the obligations in regard to Section 5 of AS 1170.4.

Often these designers lack the detailed knowledge and a real appreciation of what is required. They tend to see it as a daunting task when in simplistic terms, it only needs consideration of a lateral force on the component to ensure that the component does not bend, tip over or slide sideways, in the unlikely event of an earthquake.

In the case of mechanical design, the designers often are confusing elastic design with limit state design, and applying deflection criteria inappropriate for an earthquake condition.

There is still much to be considered by all designers in this area. What can we do to assist in this area? The following is suggested:

- Approach bodies such as the Royal Australian Institute of Architects, Colleges of the Institution of Engineers, industry organisations such as Air Conditioning Contractor Association, and the like and advise them of the need to apply Section 5 of AS 1170.4 to their of design.

- Target major individual architects, building services engineers, design agencies such a Public Building Department, in each capital city advising them of their obligations.

- Target industry group to provide "Deemed to Comply Details" for the industry.

- Liaise with Standards Australia to ensure that the requirements of the Lift Code AS 1735 are consistent with AS 1170.4.

- Approaching the BCA, and building authorities in each state so that they can publish such requirements and enforce this design to consider Section 5.

There is a real need for education in this field.

6.0 REFERENCES

1 AS 1170.4 - 1993 - Minimum design loads on structures, Part 4 Earthquake Loads.

2 AS 1170.4 - Supplement 1 - 1993 - Minimum design loads on structures, Part 4 Earthquake Loads commentary.

3 AS 2121 - 1979 - SAA Earthquake Code.

4 Pacific Conference on Earthquake Engineering NZ 1991 - The Seismic Response of Non-Structural Elements in Buildings - C Arnold.

5 NZ Earthquake Commission Report, February 1991, Architectural Design for Earthquakes - A Guide to the Design of Non-structural Elements - Massey and Megget.

6 Australian Earthquake Engineering Manual Third Edition - 1993 - Irvine and Hutchison.

(DRAFT LETTER BY STRUCTURAL CONSULTANT TO ARCHITECT)

19 April 1995 Ref: MANAGERS\JWW\JP19045.ap1

Variety Architects Pty. Ltd.
132 Redhill Road,
Waveville SA 5063

Attention Mr M Guy,

Dear Sirs,

CITY EAST PROJECT

We have reviewed the above project in accordance with the requirements of the SAA Loading Code AS 1170.4, earthquake loads. In particular Section 5 of the Code, relating to the requirements for non-structural components including architectural, mechanical and electrical items will apply for this project. It is therefore important that the design team ensure that such components as set out in the code including those items listed below are either appropriately designed, allowed for in the tender documents or designed by the subcontractors as required:

- parapets, gables, verandahs, awnings, canopies and chimneys
- exterior wall and partitions including masonry and glass blocks
- ducts and risers
- partitions
- ceiling
- floors
- racks and shelves over 2 m height
- fire and smoke systems
- lifts, escalators and the like
- electrical switchboards, lighting and the like
- ducts, piping including hydraulics
- mechanical and electrical equipment

Where ceilings restrain the top of partition walls, the ceiling supplier must allow for the earthquake loads from the partition walls.

This office has designed the structure as well as the external and masonry walls to comply with AS1170.4 as listed above.

The following criteria will apply for the design of the structural, architectural. mechanical, electrical and other components for this project:

- General structure
- Structure classification Type II
- Acceleration coefficient (Adelaide) a 0.10

- Site factor S 1.0
- Importance factor I 1.0
- Design category Category C
- Non structural Components
  - Architectural - refer table 5.1.5(a) of AS 1170.4
    Electrical and Mechanical - refer table 5.1.5(b) of AS1170.4.

All components and their attachments shall be designed to resist forces as calculated from the relevant formulae detailed in Section 5 of AS1170.4.

Please do not hesitate to call the undersigned if you require additional clarification.

Yours faithfully,

J W Woodside

PRINCIPAL

CC Joe Blow Mechanical & Electrical Consultants

CC Jill Bond Plumbing Consultants

CC John Doe Lift Consultants

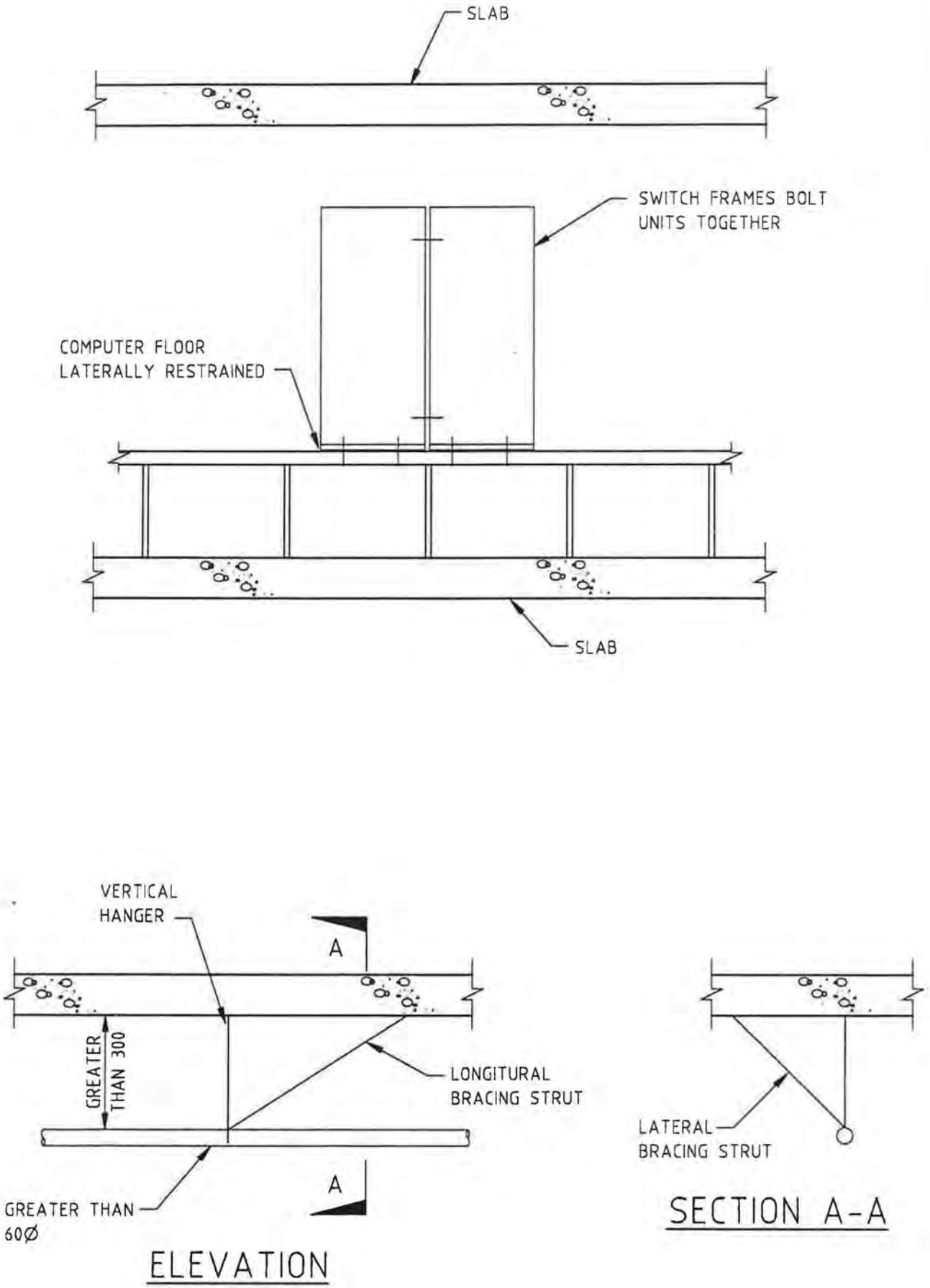
SLAB
SWITCH FRAMES BOLT
UNITS TOGETHER
COMPUTER FLOOR
LATERALLY RESTRAINED
SLAB
VERTICAL
HANGER
A
GREATER
THAN 300
LONGITURAL
BRACING STRUT
A
GREATER THAN
60Ø
ELEVATION
LATERAL
BRACING STRUT
SECTION A-A

W:\ZZZ6.00\SK3

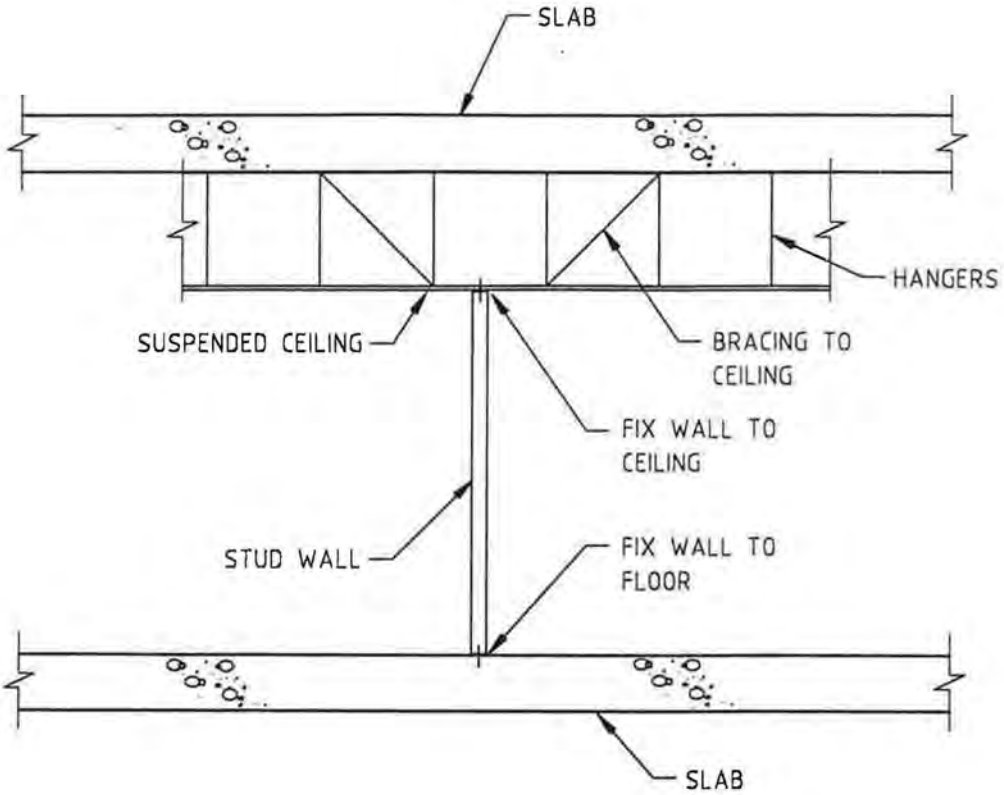

RESTRAINT OF CEILING / WALLS

W:\ZZZ6.00\SK2

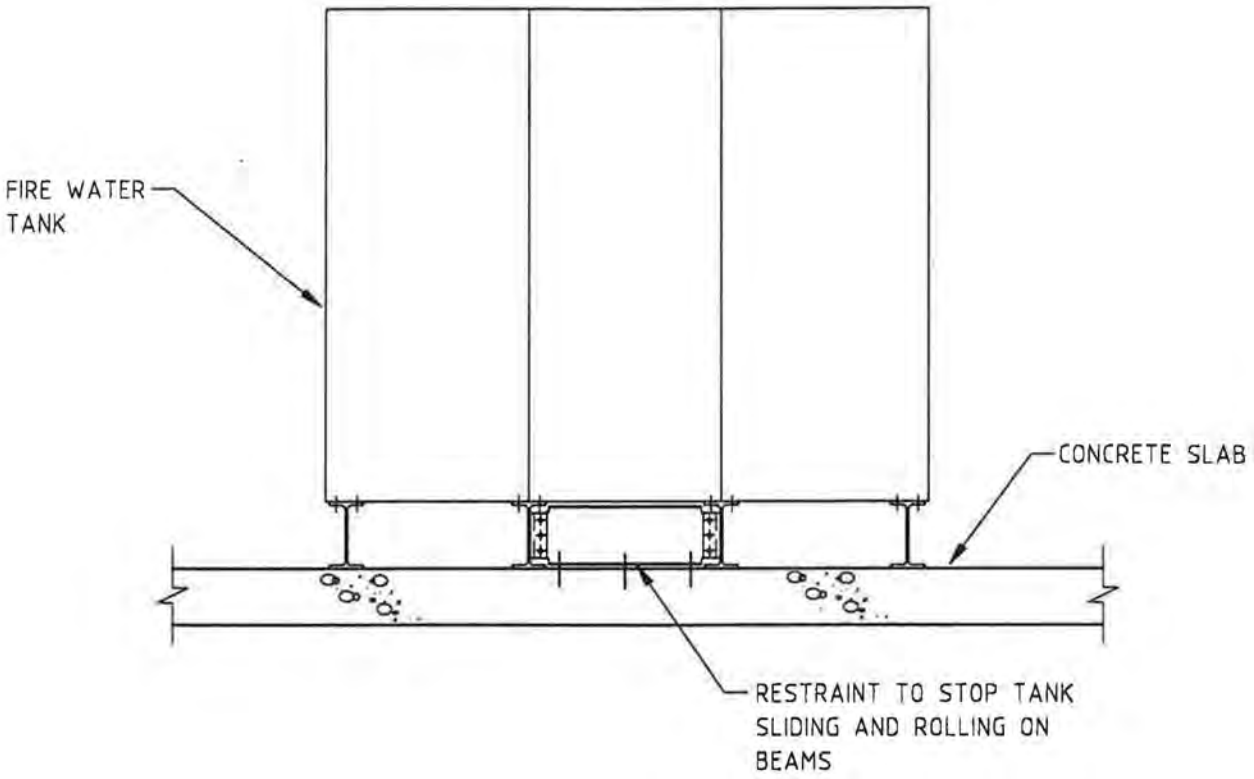
FIRE WATER TANK
CONCRETE SLAB
RESTRAINT TO STOP TANK SLIDING AND ROLLING ON BEAMS

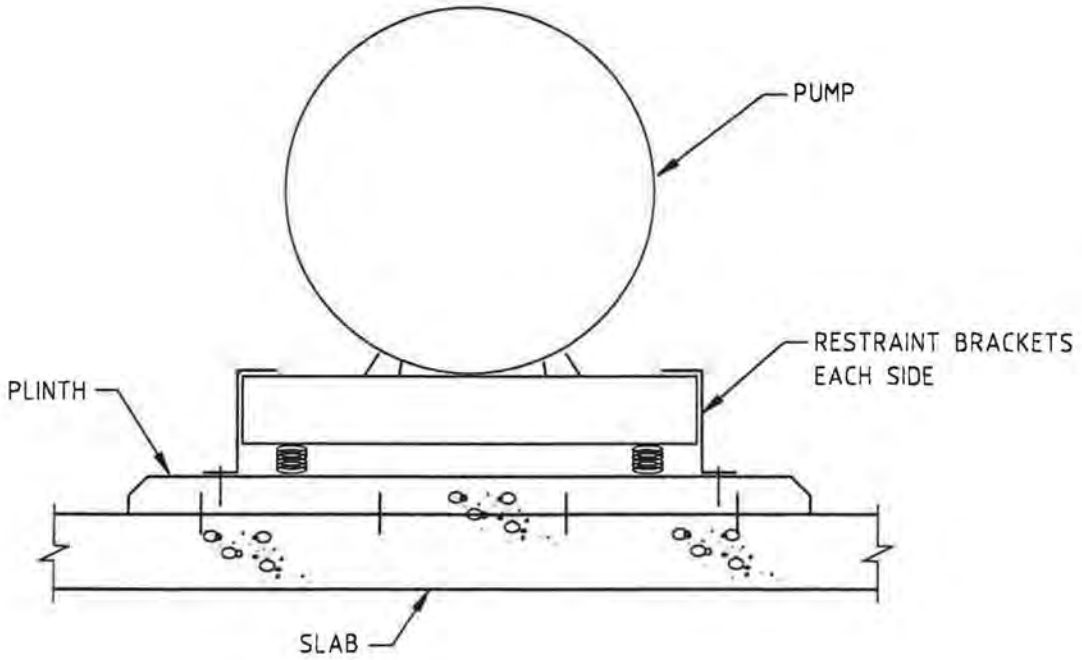
PUMP
RESTRAINT BRACKETS EACH SIDE
PLINTH
SLAB

W:\ZZZ6.00\SK1

SIMULATION OF INTRA-PLATE EARTHQUAKES IN AUSTRALIA USING GREEN'S FUNCTION METHOD: SENSITIVITY STUDY FOR NEWCASTLE EVENT

C. SINADINOVSKI, K.F. MCCUE, M. SOMERVILLE, T. MUIRHEAD AND K. MUIRHEAD

Cvetan Sinadinovski has a doctorate in seismic tomography and geophysical imaging from Flinders University of South Australia. He has worked as visiting fellow in USA and Europe, and as a software specialist in Sydney and Adelaide. Currently he is employed as a professional officer in the Australian Geological Survey Organisation in Canberra. Member of ASEG, AIG and AEES.

Kevin McCue, FIEAust, has worked as an Earthquake Seismologist for some 20 years and now leads the Earthquake Information and Hazard Assessment Project at AGSO. Kevin has contributed to both earthquake codes AS2121 and AS1170.4, and has participated in engineering projects in Australia, Papua New Guinea and Europe.

Malcolm Somerville has a doctorate in geophysics from the University of California, Berkeley, and has practiced engineering seismology since 1974. He has been involved with seismic design and analysis criteria for critical facilities, and has carried out field investigations of site and structure response. He is currently involved with seismic source and seismic hazard assessment with the Australian Geological Survey Organisation.

Tim Muirhead obtained degrees in computer science and systems engineering from the Australian National University in 1994. He worked for the Australian Geological Survey Organisation for six weeks as part of his vacation experience and is currently a contract engineer for BHP Engineering in Wollongong.

Ken Muirhead obtained a degree in communications engineering in 1963 and a Ph.D. in seismology in 1968 - both from the University of Tasmania. After 20 years research in seismology at the Australian National University he joined the Australian Geological Survey Organisation in 1986 as head of the Nuclear Monitoring section.

Paper No. 11

ABSTRACT:

Characterisation of intra-plate earthquake ground motion is a current issue in earthquake engineering. In the absence of near-field strong motion records for large earthquakes, such motions can be synthetically computed from accelerograms of smaller events using the Green's Function method. The basic assumption of this method is that a large earthquake can be simulated by the summation in time of a number of smaller earthquakes. Earthquake sub-events are given slightly different origin times to represent the propagation of a rupture along a fault plane. The magnitude 2.3 aftershock of the 29 December 1989 Newcastle earthquake was used as the sub-event in this study. It was recorded on rock at the University site. In synthesising the main shock of magnitude 5.6, source parameters were varied in a two-step procedure. Comparative estimates of acceleration values were also obtained by attenuation-law scaling and from MM intensity. The results of the study show that the synthetic near-field seismograms produced by this method are realistic, and can be used to represent ground motion during typical Australian intra-plate earthquakes.

1. INTRODUCTION

On a global scale, the majority of earthquakes happen inter-plate, although there are moderate to large earthquakes which occur within the plates. The seismicity of the Australian continent is typical of that experienced for intra-plate environments. In the last 100 years, twenty earthquakes have been recorded with magnitudes of 6.0 or greater, and on average there are 2 to 3 earthquakes per year with magnitude of 5.0 or more[1,2]. All those earthquakes occur within the crust (less than 40km) and their focal mechanisms are consistent with horizontal compression, as inferred from in-situ stress measurements and observations of quarry floor and borehole deformation.

According to various authors [3,4,5], intra-plate earthquake mechanisms show different characteristics from inter-plate earthquakes. Typical earthquakes in continental interiors are thought to be associated with high local stress concentrations and stress drops which are associated with relatively short fault rupture lengths. Consequently, the duration of higher intensity ground motion is shorter and the frequency content is shifted towards shorter periods. The Newcastle mainshock of 28 December 1989 is one example of how an intra-plate earthquake with a moderate magnitude can cause loss of life and substantial damage if it occurs close to a population centre.

2. DATA

Ground accelerations from intra-plate earthquakes have been especially analysed for the purpose of defining the Standards for the Australian Loading Code. Records to date show that the strong ground motion usually lasts for just a few seconds, with clearly identifiable P and S phases. In general, the seismogram consists of a very short rise time, followed by 5 or 6 cycles near the peak amplitude and then a rapid decay towards the end when low frequency surface waves start to dominate. Intra-plate earthquakes with relatively small magnitude can produce large peak accelerations and large ground velocities in the near-field region, so their effect on buildings must always be taken into consideration[1] .

In this analysis, recent records from the accelerograph network collected at the Australian Geological Survey Organisation in Canberra are used. AGSO's current database comprises a number of strong motion recordings from intra-plate earthquakes at various distances, including a few records at close range to large intra-plate earthquakes, none of which, however, are Australian. One approach of estimating ground motions at close range to large Australian earthquakes is to synthesise them from close-range recordings of smaller earthquakes.

2.1 Newcastle Event

The epicentre for the main Newcastle event on 28 December 1989 was about 15km west-southwest of the city centre. There were no strong motion recorders in the Newcastle area installed at the time of the earthquake, and the nearest accelerograph was 105km to the south [6]. The average magnitude of ML=5.6 has been adopted from a range of estimates of its size. The origin time and focal coordinates were computed from seismograms of distant stations as:

Origin time:	23 26 58 +/- 1.5s UTC
Location:	32.95 +/- 0.06° S
	151.61 +/- 0.16° E
Focal depth:	11.5 +/- 0.5 km

The final solution for the focal mechanism is that of a thrust mechanism with a near-horizontal principal stress direction striking N44° E. From the two nodal planes, the plane with 110° strike and 32° dip was selected as the likely fault plane, based on the aftershock detected by an array of triaxial digital recorders deployed within a 10km radius of the city centre following the main shock.

3. METHODOLOGY

Synthetic accelerograms for large earthquakes are computed in a number of different ways[1]. Two of the most common methods are using the random white noise, and the scaling methods. While the first method is based on generating band-limited white noise of defined duration, the scaling method assumes multiplication of the original time history by a constant factor. Both methods have disadvantages due to the oversimplified assumptions about the seismic source and energy propagation.

In other methods, for example the Phase Spectrum method, the original phase spectrum of an existing recording is scaled to an appropriate shape using some empirical spectral attenuation function. The modified spectrum is then transformed back into the time domain to form the desired time series. This procedure requires that the non-stationary assumption of the original seismogram is valid for larger earthquakes. All these types of approximations are usually not appropriate for a large increase of magnitude because they give synthetics which are either too short or have insufficient low-frequency content.

3.1 Green's Function Method

In the superposition method or Green's Function Method, the basic assumption is that a large earthquake can be simulated by the summation in time of a number of smaller earthquakes[7]. Each small earthquake or sub-event is considered to have a slightly different origin time and location to represent the propagation of a rupture along the fault plane, and the signals are then summed together to produce the synthetic record. Potentially this method can produce useful accelerograms for engineering purposes if a suitable record for the sub-event can be found and the source parameters are well known [8,9].

With a proper choice for the number of sub-events and their waveform scaling factor, the spectrum of the simulated events produced by this method can be made to conform to low- and high-frequency limits. Those values are determined by the ratio of the seismic moment of the simulated event to that of the sub-event.

The corner frequency of the sub-event should be higher than any frequency of interest in the synthesised waveform. The quality of the final outcome will depend on how well the model represents the distribution of slip over space and time.

4. SIMULATION

In this simulation with the Green's function method, the aftershock of 29 December 1989 was used. A magnitude 2.3 earthquake shook Newcastle nearly 34 hours after the main event and had an origin in the same focal area. A seismogram from the site at the University, about 20km away, recorded by an instrument installed on rock was selected to represent the input sub-event.

Figure 1 shows the recorded ground motion over a period of 15.43 seconds. The highest peak acceleration is observed on the N-S component, reaching values of 0.0102g, and it should be expected that with proper fault orientation, this characteristic would be preserved in the synthetics.

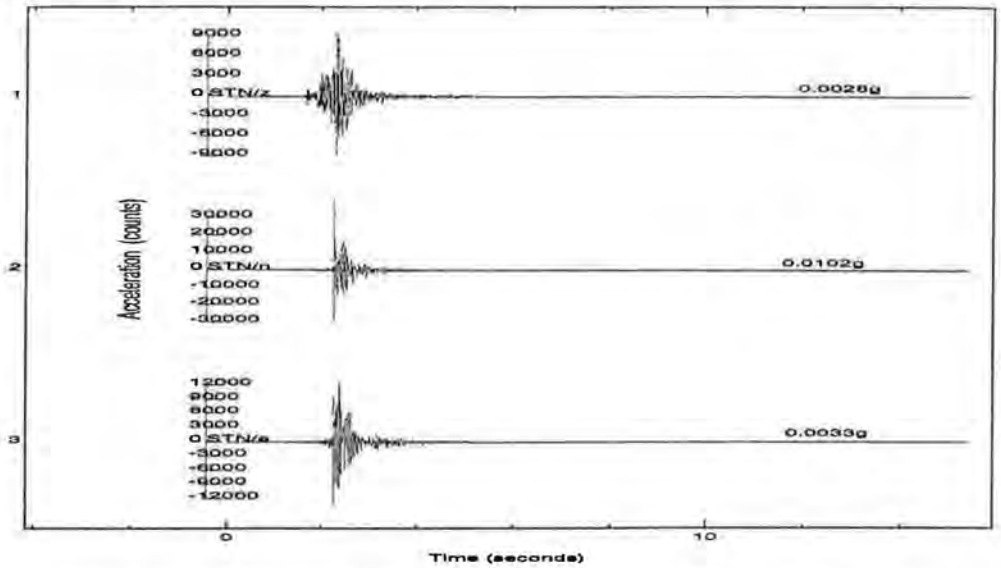

Figure 1: Acceleration record of Newcastle aftershock of 29 December 1989

In extrapolating to the stronger 1989 Newcastle earthquake, the source parameters were set to a rupture length of 1.5km. The magnitude exponent terms in the spectral formula were chosen to satisfy the low- and high-frequency constraints [7]. The procedure was applied in two steps, summing 300 sub-events and thus gradually increasing the magnitude from 2.3 to 5.6.

A rupture velocity of 2.4km/s or 75% of the shear wave velocity at a depth of 11.5km for the Sydney basin model was used, and it was assumed that the rupture started in the centre of the fault and simultaneously propagated toward the ends.

Figure 2 represents the final solution for these initial conditions with each trace plotted with normalised scaling.

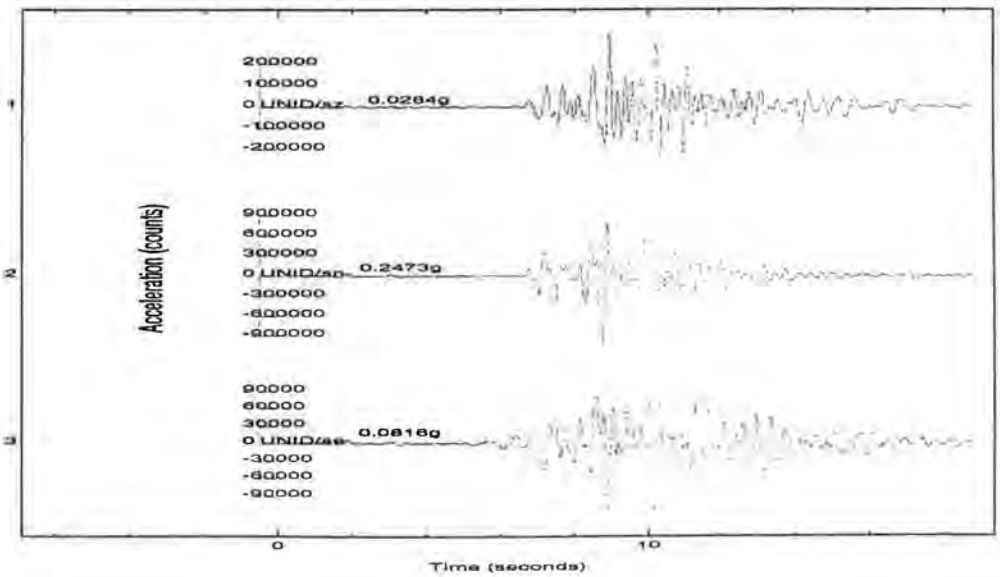

Figure 2: Synthetic Output for the Newcastle mainshock

Peak accelerations are proportional to the scaling factor used in the spectral formula to multiply with the sub-event, and maximum values of about 0.25g are realistic for shallow strong earthquakes which cause damage at the intensity VIII level on the Modified Mercalli scale.

5. ANALYSES

Two test approaches were adopted to further analyse the characteristics of the synthetic waveform obtained from Green's function simulation and representing one strong Australian intra-plate earthquake; the Fourier Amplitude Spectrum and the Response Spectrum.

5.1 Fourier Amplitude Spectrum

In this procedure, the Fourier Amplitude Spectrum of the acceleration time series is calculated by transforming the time series from the time domain to the frequency domain using fast Fourier transform. The scalar amplitude of each complex sample in the frequency series is displayed. By default, the amplitudes are plotted without further processing, although multiple smoothing is available in the program and can be applied before the actual operation of transformation is performed.

Figure 3 shows the results of the unsmoothed version of the Fourier Amplitude Spectrum for all three components of the synthetic Newcastle mainshock. A relative reduction in the higher frequency is noticed, because these higher frequencies are added destructively during the summation part of the simulation. In this case, most of the energy will be concentrated in arrivals with frequencies between 1 and 5 Hz.

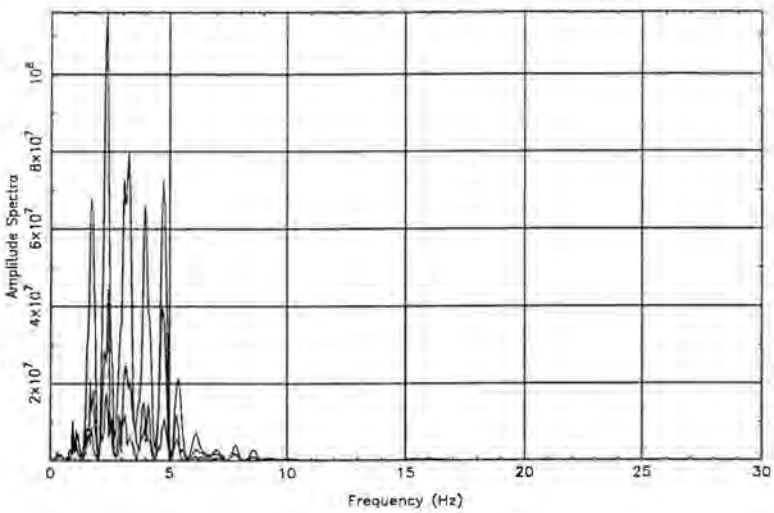

Figure 3: Fourier Amplitude Spectrum for the synthetic Newcastle mainshock

5.2 Response Spectrum

The standard Response Spectrum program was used as described by the U.S. Geological Survey procedure [10]. In the processing step, the maximum response of a simple (single degree of freedom, damped, harmonic) oscillator is calculated, subjected to the input acceleration time series. The maximum response is calculated for oscillators having damping ratios of 0%, 2%, 5%, 10% and 20% of critical damping, and for different natural periods.

Figure 4 represents the acceleration response spectra for the synthetic Newcastle mainshock for all three components, for an oscillator with natural periods of 0.01 to 10 seconds, and for five defined damping ratios.

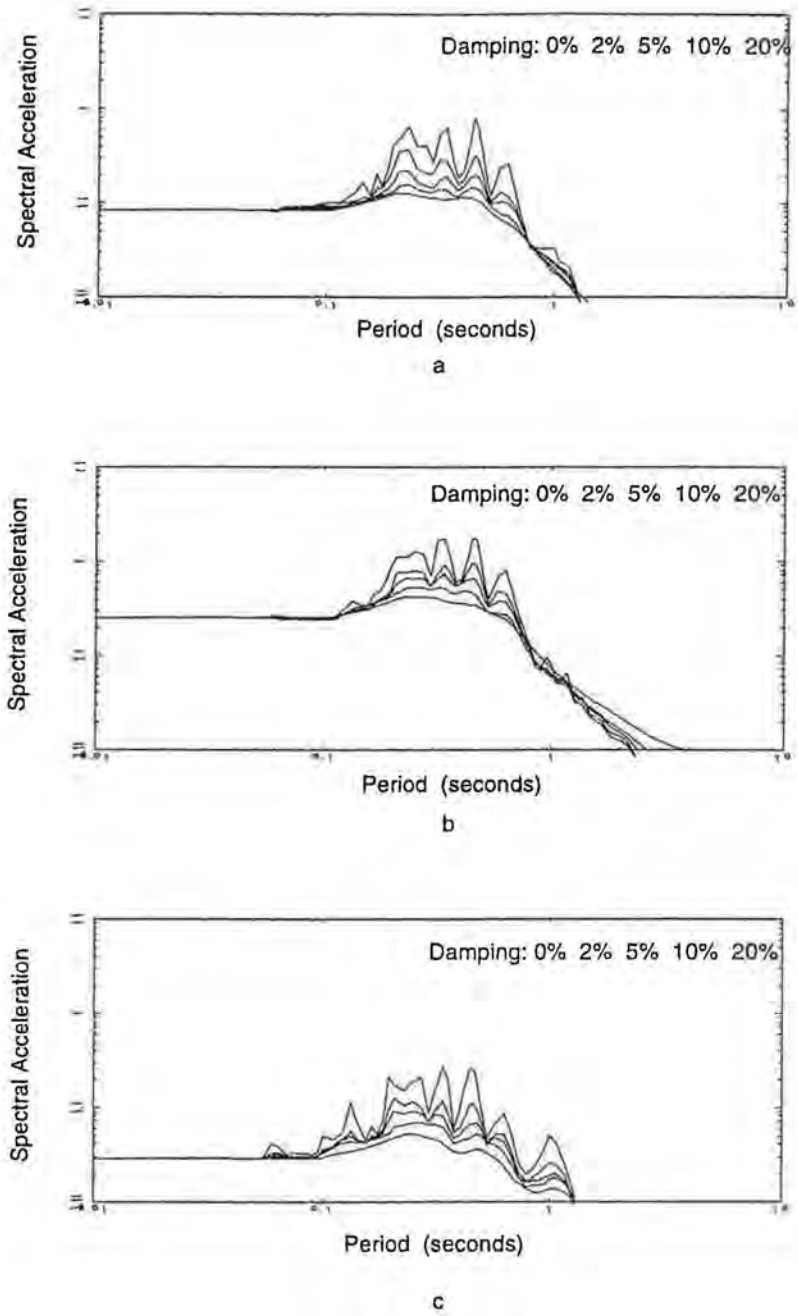

Figure 4: Acceleration spectra for the synthetic Newcastle mainshock
a) E-W direction
b) N-S direction
c) vertical direction

These response spectral shapes are similar to those observed for Western North American earthquakes recorded at rock sites [11]. The comparisons were made for close distances and moment magnitudes of 4.5, 5, and 6. The spectral shapes show reasonably good agreement with the empirical results at frequencies of 1 to 10Hz. Magnitude dependence of spectral shapes is significant for periods greater than 0.2 seconds.

6. DISCUSSION AND CONCLUSIONS

Results from this analysis of horizontal ground acceleration indicated that in a Kanai type attenuation relation, the magnitude scaling factor b and the distance exponent are lower than those obtained from studies of large earthquakes in the Western US [12]. Simple linear extrapolation to epicentral distances done by using a regional relation between the peak ground acceleration and distance, gave a maximum acceleration of 0.15g.

The Modified Mercalli intensity in Newcastle during the 1989 earthquake was typically VI-VII at rock sites and VIII at alluvial sites[2]. Estimated peak ground acceleration levels corresponding to theses intensities are roughly 0.1g and 0.2g, with standard deviations amounting to a factor of two. The seismic intensity results do not place tight constraints on the peak ground acceleration levels, although it is fair to conclude that there was dynamic amplification amounting to a factor of two or more at alluvial sites.

The accelerograms synthesised for the Newcastle mainshock, obtained by using the aftershock as an empirical Green's Function, suggest a peak horizontal acceleration on rock of about 0.25g, and a strong-motion duration of several seconds. While the duration estimate is realistic, our computations may have exaggerated the actual constructive interference effects that we were modeling, because in effect we assumed that the rupture was completely coherent and that there were no crustal heterogeneities affecting propagation between the rupture and the receiver. Incorporating some incoherence in the calculations would produce lower peak accelerations. This is one of the elements we plan for a further investigation, where we will carry out a validation study using recordings of the magnitude 5.3 Ellalong earthquake sequence of 1994, including the mainshock as well as aftershocks.

These preliminary results show that the synthetic near-field seismograms produced by Green's Function simulation are realistic, and can be used for engineering purposes to represent typical ground motion during intra-plate earthquakes in Australia.

7. REFERENCES

1. "AEES Seminar on Earthquake Engineering and Disaster Reduction", (1993). Editors: Wilson, J, and van Doorn, C., Melbourne, Australia.
2. McCue, K.F., Dent, V., and Jones, T., (1995). "The characteristics of Australian Strong Ground Motion", Proceedings Pacific Conference of Earthquake Engineering, Melbourne, Australia.
3. McCue, K.F., Gibson, G., and Wesson, V., (1988). "Intra-plate Recording of Strong Motion in South-Eastern Australia", Proceedings of 9th World Conference on Earthquake Engineering, Tokyo-Kyoto, Japan.
4. Gibson, G., Wesson, V., and Jones, T., (1995). "Strong Motion from Shallow Intraplate Earthquakes", Proceedings Pacific Conference of Earthquake Engineering, Melbourne, Australia.
5. Morison, D.W., and Melchers, R.E., (1995). "Studies of Structural response to typical Intra-Plate Ground Shaking", Proceedings Pacific Conference of Earthquake Engineering, Melbourne, Australia.
6. McCue, K., Wesson, V., and Gibson, G., (1990). "The Newcastle, New South Wales, Earthquake of 28 December 1989", *BMR Journal of Australian Geology and Geophysics*, 11, pp. 559-567.
7. Joyner, W.B., and Boore, D.M., (1986). "On simulating large earthquakes by Green's-function Addition of Smaller Earthquakes", 37 Geophysical Monograph of American Geophysical Union, Washington D.C., USA.
8. Frankel A., (1995). "Simulating Strong Motions of Large Earthquakes Using Recordings of Small Earthquakes: the Loma Prieta Mainshock as a Test Case", *Bull. of the Seism. Soc. of America*, Vol. 85, No. 4, pp. 1144-1160.
9. Jankulovski, E., Sinadinovski, C., and McCue, K.F., (1996). "Structural Response and Design Spectra Modelling: Results from Some Intra-plate Earthquakes in Australia", 11th World Conference on Earthquake Engineering, Acapulco, Mexico.
10. Converse, A.M., (1992). "Basic Strong-Motion Accelerogram Processing Software", USGS Open-File Report 92-296A.
11. Silva, W.J., and Green, R.K., (1989). "Magnitude and Distance Scaling of Response Spectral Shapes for Rock Sites with Applications to North American Tectonic Environment", *Earthquake Spectra*, Vol. 5, No. 3, pp. 591-624.
12. Jones., T., Wesson, V., McCue, K., Gibson, G., Bricker, C., Peck, W., and Pascale, A., (1994). "The Ellalong, New South Wales, Earthquake of 6 August 1994", AEES Seminar Survival of Lifelines in Earthquakes, Canberra, Australia.

DESIGN OF DOMESTIC UNREINFORCED MASONRY BUILDINGS TO AS1170.4

GREGORY KLOPP AND MICHAEL GRIFFITH

Gregg Klopp graduated from the University of Adelaide in 1988. He then worked for Dare Sutton Clarke Pty Ltd in Adelaide for two years before returning to the University of Adelaide in 1991 to undertake a PhD in the seismic design and analysis of unreinforced masonry. H has since returned to Dare Sutton Clarke at the completion of his doctorate.

Mike Griffith completed his BS and MS at Washington State University and PhD at the University of California, Berkeley in the U.S. Before taking up his current position at the University of Adelaide, he spent several years working as a structural engineer for a consulting firm in California. He was a member of the Standards Australia committee BD/6/4 which revised the earthquake code and is a member of both the Australian and New Zealand Earthquake Engineering Societies.

ABSTRACT:

This paper examines the domestic provisions of the Australian earthquake code, AS1170.4 as it is applied to two unreinforced masonry buildings in Adelaide. The results of the AS1170.4 analysis are compared to the results of response spectrum analyses of the buildings. The performance of the buildings as predicted by both methods is discussed.

Paper No. 12

1. INTRODUCTION

Recent earthquakes throughout the world have shown unreinforced masonry to be one of the most vulnerable forms of construction when subjected to earthquake excitation. In Australia unreinforced masonry is commonly used to construct domestic structures such as houses and flats. This paper examines the earthquake design requirements of AS1170.4 [1] for use in the design of domestic unreinforced masonry buildings.

A three year study at the University of Adelaide examining the design and performance of unreinforced masonry structures subjected to earthquake excitation was used as the basis of this paper. In the study, fifteen unreinforced masonry buildings in Adelaide were studied with ambient vibration tests to determine their natural period, and were analysed for earthquake response using the response spectrum method and the equivalent lateral force requirements from AS1170.4. Two of these buildings were domestic structures and are the basis for this paper.

2. AS1170.4 DOMESTIC DESIGN REQUIREMENTS

Unlike the analysis methods given in AS1170.4 for non-domestic structures, the design approach for domestic structures is relatively simple. AS1170.4 gives the design base shear for a domestic structure to be fifteen (15) percent of the earthquake design weight (G_g) of the building. Note - it is not a function of the natural period of the building, soil conditions, a design response spectra, the construction type, or the building's importance. However, it is possible to apply the AS1170.4 equivalent static force base shear formula for non-domestic structures to an unreinforced masonry domestic structure to create a simplified base shear formula.

From ambient vibration tests conducted as part of the overall research program (Klopp and Griffith [2]) it was found that the periods of the unreinforced masonry buildings placed all of the buildings in the study which complied with the use of unreinforced masonry in AS1170.4 on the constant acceleration region of the design response spectra. The 'importance factor' is 1.0 for a domestic structure. The 'response modification factor' for unreinforced masonry is 1.5. For the purposes of this paper the 'acceleration coefficient' will be taken as 0.10 corresponding to the coefficient for Adelaide, the capital city with the highest acceleration coefficient. Using these values the non-domestic base shear formula produces a base shear value of 16.67 percent of the earthquake design weight.

It can be seen that the base shear for a domestic structure is 90 percent of that for the same building classified as a non-domestic structure. The same structure in Sydney or Melbourne, where the acceleration coefficient is 0.08, would have a non-domestic base shear of 13.3 percent of G_g which would be 80 percent of that for the same building classified as non-domestic.

3. THE TWO DOMESTIC BUILDINGS

As noted earlier, two of fifteen buildings in the study at The University of Adelaide were domestic structures. These two buildings were part of a residential development in

suburban Adelaide and are both two storey flats of construction typical in Adelaide in the 1960's and 1970's. A plan of the buildings is given in Figure 1. Both buildings consist of double leaf external brick walls with double leaf walls separating the units. The upper floor is a flat reinforced concrete slab. A flat metal deck roof is constructed using beams and purlins. The two buildings will be referred to as building A and building B. Building B has a reinforced concrete staircase at one end that services both buildings. Balconies provide access to the upper level units.

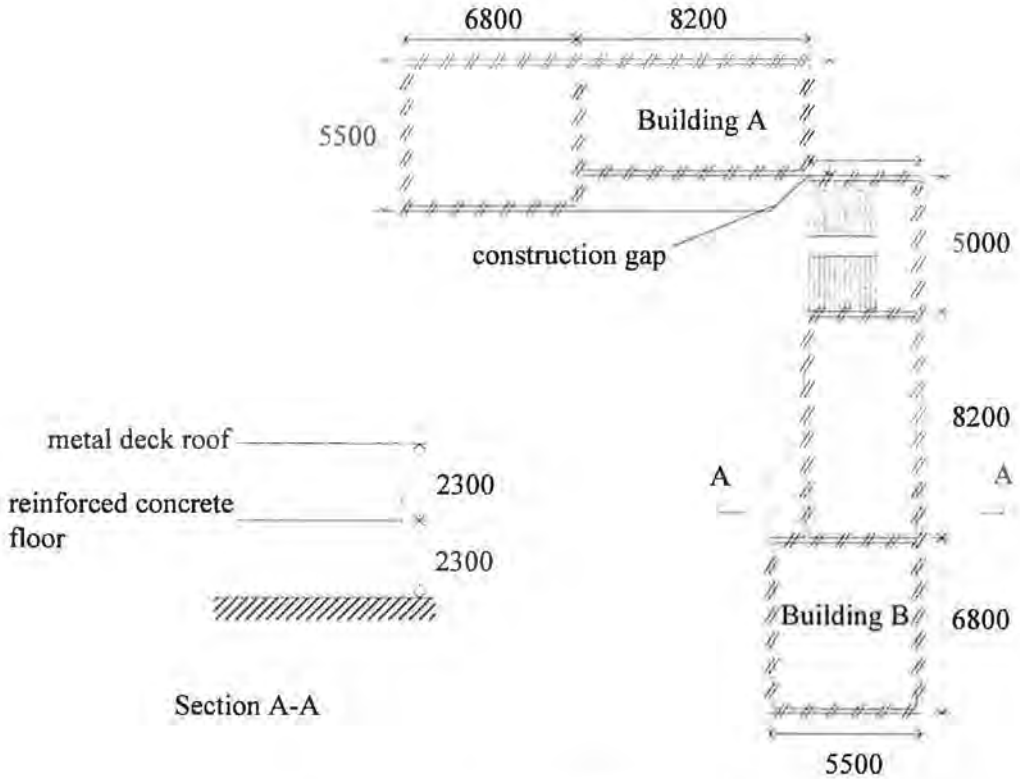

Figure 1 - Plans of two storey buildings.

4. AMBIENT TEST RESULTS

As noted in the introduction, the natural frequencies/periods of the buildings in the study were measured using ambient vibration techniques (Klopp and Griffith [2]). The measured periods for building A and building B are shown in Table 1.

Table 1. Ambient vibration test results.

Building	Period in Short Direction	Period in Long Direction
building A	0.139 seconds	0.137 seconds
building B	0.139 seconds	0.139 seconds

5. EARTHQUAKE ANALYSES

A response spectrum analysis was performed on each of the buildings. The response spectrum analyses were performed using the IMAGES3D finite element program with the design response spectrum from AS1170.4. The design parameters corresponded to a firm soil site in Adelaide ($S = 1$, $a = 0.10$, and $R_f = 1.5$). The unreinforced brick masonry walls, the concrete floor, and the metal deck roof were modelled using plate elements.

The first stage of the finite element modelling involved undertaking modal analyses of the buildings. The modal analyses were used to calibrate the computer models with the results of the ambient vibration tests. The three variables available for the calibration were the effective thickness of the wall elements, Young's Modulus and Poisson's Ratio of the masonry. The material properties for the concrete floors and metal deck roofs were taken as typical design values.

The element thickness for the masonry walls was taken to be 110 mm for single leaf walls and 220 mm for double leaf walls. Poisson's Ratio was taken to be 0.2. The density of the masonry walls was taken as 19 kN/m^3. An appropriate value of Young's Modulus was determined by comparing the natural periods determined from the modal analyses to those measured in the ambient vibration tests. Based on these comparisons for all 15 buildings in the study, a value for Young's Modulus of 1065 MPa was used. It should be noted that this value is consistent with values reported by other researchers (Arya [3], Jankulovski et al [4], and Priestley [5].

In order to undertake a response spectrum analysis in accordance with the requirements of AS1170.4 it was necessary to evaluate the response of the structure for modes representing 90 percent of the structures mass. Table 2 shows the modes evaluated for each of the buildings and the corresponding modal mass expressed as a percentage of the total mass. For building B it was not possible to evaluate enough modes to achieve the 90 percent requirement because of computing power limitations.

Table 2. Results of modal analyses.

Building	Direction	Modal Frequency (Hertz) and Percentage of Total Mass		Percentage of Total Mass
		Mode 1	Mode 2	
building A	short	11.1 (90.4%)	-	90.4%
	long	15.7 (5.5%)	17.0 (86.4%)	91.9%
building B	short	5.2 (81.9%)	8.2 (2.1%)	84.0%
	long	8.8 (46.4%)	9.2 (18.2%)	64.6%

The modes were then used in the response spectrum analyses. The response spectrum analyses were performed separately for earthquake input along both major axes of the building. The individual modal responses were combined using the Complete Quadratic Combination method (CQC) (Wilson et al [6]). The maximum responses of the buildings

considered here are the base shear, maximum and average connection forces and the required friction coefficient at all wall-slab connections, the wall bending stresses, and the shear strain in the walls.

Table 3. Response Spectrum Analysis Results : Building A

Direction	Short	Long		
	Mode 1	Mode 1	Mode 2	CQC
Base Shear (kN) (W = self weight of the building)	-161 0.13W	10 0.01W	-153 0.12W	147 0.12W
In-plane Connection Force -Maximum (kN/m)				
1st Floor	11.3	-1.1	5.3	4.7
friction coefficient (1st)	0.60	0.06	0.28	0.25
Roof	2.9	-0.3	1.1	0.9
In-plane Connection Force -Average (kN/m)				
1st Floor	9.9	-0.6	4.4	4.1
friction coefficient (1st)	0.52	0.03	0.23	0.21
Roof	2.1	-0.1	0.7	0.6
Wall Bending Stresses (MPa) - horizontal and vertical				
1st Floor - Hori	0.014	0.002	0.014	0.015
- Vert	0.036	0.004	0.031	0.034
Roof -Hori	0.013	0.002	0.018	0.020
- Vert	0.045	0.005	0.054	0.057

The results of the response spectrum analyses for the two buildings are given in Tables 3 and 4. Considering first the base shears. The base shears for the two buildings using the AS1170.4 domestic requirements were calculated to be 200 kN for building A and 265 kN for building B. Only for the short direction for building B did the response spectrum base shear exceed the design base shear given by AS1170.4.

The required friction coefficients were compared to those determined by Page [7] as being achievable. From Table 3 it can be seen that the friction requirements are all small enough that a sliding failure in the wall - floor connection is not expected in building A. The friction requirements for building B (Table 4) show that a possible sliding failure in the floor-wall connection could occur for excitation in the short direction. The connection forces are related to storey shear and it was found that the AS1170.4 analyses distributed a greater proportion of the base shear higher up the building than did the response spectrum analyses.

Table 4. Response Spectrum Analysis Results : Building B

Direction	Short			Long		
	Mode 1	Mode 2	CQC	Mode 1	Mode 2	CQC
Base Shear (kN)	-276	-7	276	-156	-61	212
(W = self weight of the building)	0.17W	0.00W	0.17W	0.09W	0.04W	0.13W
In-plane Connection Force -Maximum (kN/m)						
1st Floor	13.8	-0.3	13.8	3.7	1.2	4.8
friction coefficient (1st)	0.78	0.02	0.78	0.20	0.06	0.25
Roof	6.1	-0.1	6.1	1.1	0.3	1.4
In-plane Connection Force -Average (kN/m)						
1st Floor	12.8	0.1	12.8	3.4	1.1	4.4
friction coefficient (1st)	0.72	0.01	0.72	0.18	0.06	0.32
Roof	4.0	-0.1	4.0	0.9	0.2	1.1
Wall Bending Stresses (MPa) - horizontal and vertical						
1st Floor - Hori	0.029	0.020	0.036	0.040	0.130	0.166
- Vert	0.096	0.073	0.123	0.057	0.294	0.348
Roof -Hori	0.062	0.075	0.099	0.173	0.050	0.219
- Vert	0.212	0.053	0.220	0.385	0.086	0.464

The bending stresses were then examined. The bending stresses in Tables 3 and 4 do not include the vertical compressive stress in the wall. They were compared to typical design values such as 0.2 MPa from AS3700 [8]. From Table 3 it can be seen that the out-of-plane bending stresses are all less than 0.2 MPa so that an out-of-plane failure was not expected in building A. Table 4 reveals that building B has the possibility of flexural bending failure in some walls even including the benefits of axial compression. Calculation of the out-of-plane bending stresses by the methods included in AS1170.4 and comparing to the strength predicted by AS3700 revealed that out-of-plane bending failures were predicted in both buildings.

The shear strains in the buildings were compared to the range of shear strength presented by Jankulovski et al [4] (0.1 MPa to 0.7 MPa). The sway of building A was less than 0.5 mm in both directions which corresponded to a shear strain of 109 microstrain. For building B the sway was about 2 to 3 mm in both directions which corresponded to shear strains of 430 microstrain to 650 microstrain. The predicted shear strain in building A is small enough that a shear failure is unexpected. The predicted shear strains in building B are of the range that a shear failure is a possibility.

6. SUMMARY AND CONCLUSIONS

It can be seen that for the two domestic buildings in this study that the domestic design requirements in AS1170.4 provide earthquake loadings that are more severe, i.e. conservative, than those predicted by a response spectrum analysis.

However, evidence from recent earthquakes, Newcastle and Kobe, suggest that stiff brittle buildings on soft soils perform poorly when subjected to earthquake excitation. Currently, the domestic design requirements of AS1170.4 do not include any allowance for soil type in the base shear formula and it may be prudent for the soil factor to be included in the design base shear for domestic structures as it is for non-domestic structures.

Further, with the majority (if not all) of brittle unreinforced masonry buildings falling on the constant acceleration region of the design response spectrum, the appropriateness of the level of acceleration in this region of the design spectrum plays an important role in determining the success of the earthquake design. Further examination of this area of the design response spectrum may also be appropriate.

7. ACKNOWLEDGMENTS

The authors gratefully acknowledge the financial assistance of the Australian Research Council in funding the overall study.

8. REFERENCES

(1) AS1170.4-1993 "Minimum design loads on structures Part 4 : Earthquake loads", Standards Australia, Sydney, 1993.

(2) Klopp, G.M. and Griffith, M.C. "Dynamic Characteristics of Unreinforced Masonry Buildings" *Aust.Civ.Eng.Trans., IEAust* Vol. CE35, No. 1, March, 1993.

(3) Arya, A.S. "Model studies of masonry buildings as related to earthquake resistant design requirements" *Proc.Int.Res.Conf.EquakeEng.,* Skopje, 30 June - 3 July, 1980.

(4) Jankulovski, E.; Parsanejad, S. and Samali, B. "Earthquake resistance assessment of masonry buildings", *Proc.3rd Nat.Mas. Sem.*, Brisbane, Aust., 14-15 July, 1994

(5) Priestley, M.J.N. "Seismic behaviour of unreinforced masonry walls" *Bul.New Zealand NatSocEquake Eng.*, Vol. 18, No. 2, June, pp 191-205, 1985.

(6) Wilson, E.L.; Der Kiureghian, A. and Bayo, E.P. "A replacement for the SRSS method in seismic analysis" *J.Equake.Eng.StructDyn.*,Vol. 9, No. 2, March, pp 187-194, 1981.

(7) Page, A.W. "A note on the shear capacity of membrane type dampproof courses" *Research Report 097.05.1994*, Dept.Civ.Eng.Surv.,Uni.of Newcastle,Aust.,28 pages, 1994.

(8) AS3700-1988 "SAA Masonry Code", Standards Australia, Sydney, 1988.

IMPLICATIONS OF THE 1995 KOBE JAPAN EARTHQUAKE FOR AUSTRALIA

MICHAEL GRIFFITH AND LAM PHAM

Dr. Mike Griffith, PhD MSc BSc MIEAust CPEng, is Senior Lecturer and Head, Department of Civil and Environmental Engineering at the University of Adelaide. Dr. Griffith is a national committee member of the Australian Earthquake Engineering Society, a member of the Australian Standards Committee for Earthquake Loading, and a member of the NZ Earthquake Engineering Society and the Earthquake Engineering Research Institute. He worked for several years as a structural engineer for a consulting firm in Berkeley California after completing his PhD at the University of California. He is the co-author of two books and over 40 papers on earthquake engineering.

Dr. Lam Pham is a Principal Research Scientist with the CSIRO Division of Building Construction and Engineering. He is an Academic Associate in the Department of Civil & Environmental Engineering at the University of Melbourne.

His chief interests include: timber structures, steel connections, loading, welding and structural reliability.

He has appointments as a member of AWRA - Panel 6 Structures, SAA Steel Code Committee BD/1, SAA Loading Code Committee BD/6 and SAA Composite Construction Code Committee BD/32.

ABSTRACT:

This paper presents an overview of the authors' observations on earthquake damage in Kobe Japan after the January 17 Hyogoken-Nanbu earthquake. In particular, the performance of domestic construction is discussed. The paper concludes with a summary and the implications for the design of domestic buildings in Australia.

Paper No. 13

1. INTRODUCTION

Following the occurrence of the Great Hyogo-ken Nanbu Earthquake, the authors visited the Kobe region as part of the international earthquake reconnaissance effort to inspect the damage. Dr. Pham and Dr. Griffith arrived in Japan on February 2 and spent 8 days inspecting the earthquake damage.

Kobe is a modern city (population 1.5 million) located at the western end of a crescent of continuous dense urban development around Osaka Bay that includes Osaka[1] (see Figure 1). The entire area is known as Hanshin and has a regional population in excess of 10 million. It is the second most important industrial and commercial area in Japan after the Tokyo - Yokohoma area.

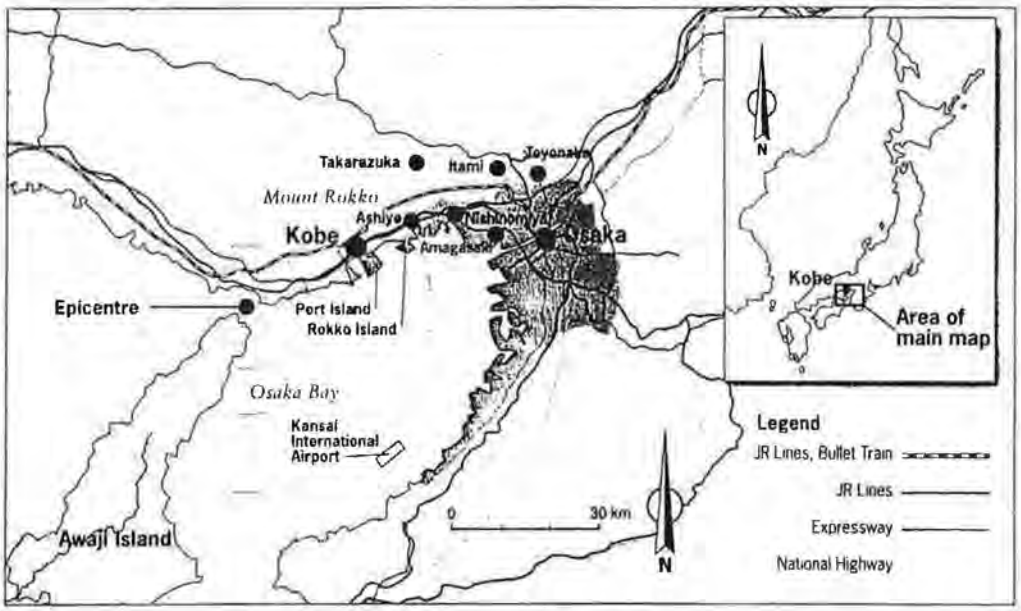

Figure 1 - Map of the Greater Kobe and Osaka region[1].

Prior to the 1995 temblor, the Hanshin region had been relatively quiet seismically with the last great earthquake reported to have occurred in 1596[2]. Hence, the earthquake design requirements for the Hanshin region reflected a lower perceived earthquake hazard.

The earthquake caused extensive damage, mainly in a narrow strip of the order of 1-2 *km* wide and 30 - 40 *km* long centred on Kobe (Figure 1). More than 5000 people were killed, approximately 27,000 injured, and over 250,000 made homeless. Significantly, more than half the deaths were suffered by people over 60 years old. This was due primarily to the Japanese custom which places the bedrooms of the elderly on the ground floor. In the large number of 2-storey houses which suffered soft-storey collapses, this resulted in many deaths by crushing. Indeed, it was estimated that 90% of deaths were from crushing by falling debris. In excess of 100,000 buildings, including houses, were destroyed and the total damage cost has been estimated as being of the order of 9.5 trillion yen ($150 billion Australian dollars) making it the worst earthquake disaster in Japan since the 1923 Great Kanto Earthquake which devastated Tokyo and Yokohama and resulted in 140,000 deaths.

2. THE EARTHQUAKE

The earthquake occurred at 5:46 am local time on Tuesday 17 January 1995. It was estimated to have had a Richter Magnitude of 7.2 (Mw = 6.9) with its epicentre located at a depth of approximately 20 *km* under the northern tip of Awaji island, approximately 30 *km* from Kobe.

The maximum ground motion intensities were estimated to have been of the order of MM9-MM10 with a maximum recorded ground acceleration of 0.83g. As noted earlier, this occurred in a narrow strip of land about 1 *km* wide and 30 *km* long extending from a few hundred metres from the edge of the sea to the lower slopes of Mount Rokko (Figure 1). The ground motion appears to have reduced dramatically on the lower slopes of Mount Rokko with maximum ground accelerations of 0.22g occurring within a few hundred metres of the strip of maximum ground motion.

3. PERFORMANCE OF DOMESTIC CONSTRUCTION

Approximately 150,000 buildings, including houses, were destroyed by the earthquake. Of these, about 55% completely collapsed with the other 45% suffering such severe damage that they were unrepairable [2].

The majority of houses in the affected areas were of the traditional Japanese "post-and-beam" construction of two storeys. Figure 2 illustrates this form of construction which is characterised by its light weight, lack of diagonal bracing, and a heavy clay tile roof which is set in a clay bedding on timber sarking. The external wall claddings on this form of construction was mostly stucco which was attached to the timber frame with nails through a

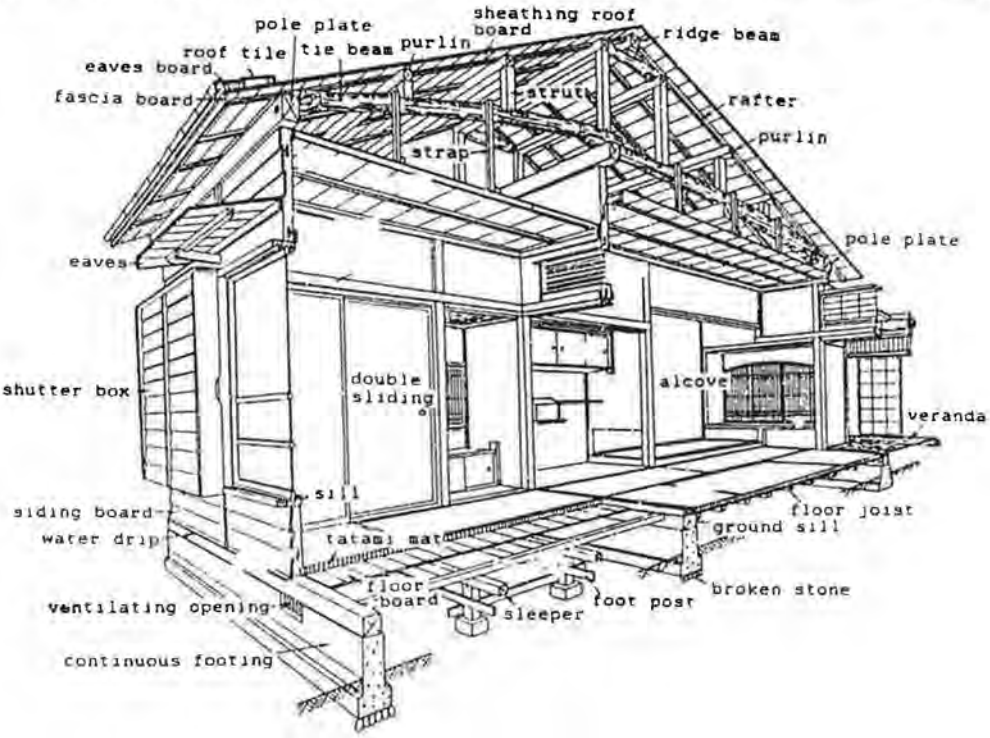

Figure 2 - Architectural drawing showing details of traditional Japanese house.

layer of building paper. The internal linings were either bamboo reinforced mud plaster or timber lath and conventional plaster. Kobe was heavily bombed during the war and lost most of its housing stock. Consequently, most of these houses were probably built just after the end of the Second World War. However, this was a time when there was a serious shortage of materials and no clear government regulation. Therefore, it would not be surprising if, in this environment, some rules, including building regulations, may have been bent leading to compromises in structural quality.

With regard to other forms of construction, there were a small number of newer, western style timber framed houses of Canadian or US origin, observed in the Kobe area. This type of construction has been introduced into Japan within the last 20 years and are known as "4-by-2" construction. Buildings of this type seemed to perform well during the earthquake, most likely due to the stiffening and strength provided by the many plywood sheathed walls as shown in Figure 3.

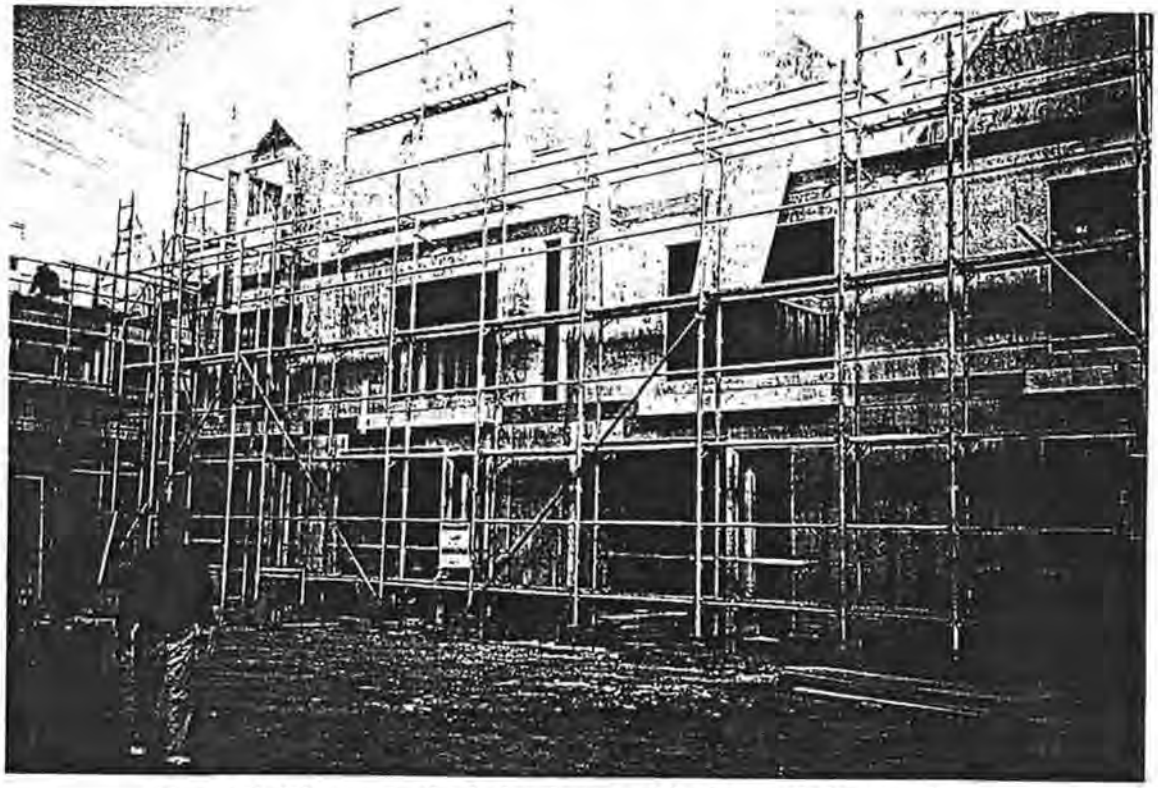

Figure 3 -Western style timber house with plywood shear walls.

Traditional houses suffered heavy damage over a wide spread area of Kobe and vicinity. The many collapses of 2-storey detached houses were also the cause of most of the deaths[3]. The damage can be classified into the following categories:

- roof damage;
- cladding damage;
- ground floor or total collapse; and
- fire damage.

There was wide spread damage to clay tile roofs. It appeared that the tiles were not fixed but rather bedded into a layer of clay which crumbled during the earthquake and allowed the

roof tiles to slide down and, in many cases, off the roof (Figure 4). The outer stucco layer, or cladding, of many houses also was observed to have fallen away from the house structures. In most cases, it appeared that the backing paper between the stucco and the timber structure provided a slip plane along which the stucco separated from the structure.

Figure 4 - Tile roof failures

The many soft-storey and total collapses were attributed to:

- heavy tile roof - the houses were built primarily to prevent wind from dislodging the tiles;
- poor connections - connections in older houses were mostly wooden dowel joints; and
- lack of lateral strength and/or stiffness due to absence of bracing, lack of internal walls, or inappropriate placement of walls and openings.

An example of this form of collapse is shown in Figure 5. There were also a significant number of 3-4 storey apartment buildings which suffered soft-storey collapses. In most cases, this was due to insufficient lateral strength and poor connections (Figure 6). It was also observed that some of the construction materials were of poor quality and that there was evidence of degradation of the timber of some of the main structural elements in many older houses.

4. INSURANCE

The Japanese insurance industry is highly regulated and protected by government. Earthquake insurance was first introduced in Japan on a limited basis in 1956. In 1966, a national scheme of insurance for households against earthquake was introduced and cover

for fire following earthquake was added only in 1984. Earthquake cover for commercial properties is limited to 30% of the fire insurance cover. Cover for homes against earthquake damage including fire, is limited to $100,000 for buildings and $50,00 for contents for a typical premium of $475. Consequently, only 7.2% of households in Japan have earthquake insurance. In Hyogo Prefecture, the figure is even less where only 3% of households are covered, possibly reflecting the lower perceived seismic risk in this region. Thus, the insured loss will be significantly smaller than the total repair bill which, for houses and buildings, is estimated at $58 billion.

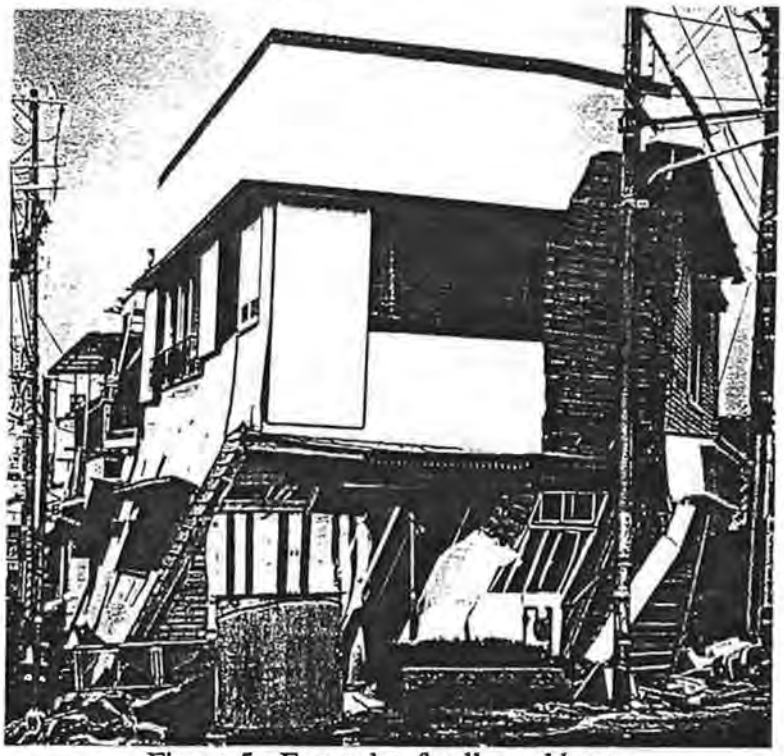

Figure 5 - Example of collapsed house

Figure 6 - Example of collapsed apartment building.

5. SUMMARY AND IMPLICATIONS FOR AUSTRALIA

The two most striking features of the pattern of building damage was the contrast between old and new (post 1981) buildings and the number of soft-storey collapses. Apartment buildings less than ten years old appeared to have suffered little or no damage, whether small or large, even when located in areas of maximum ground motion intensity. Modern lightweight frame housing also appeared to have survived undamaged in the areas of most intense shaking. Unfortunately, almost all other classes of buildings performed poorly in the areas of most intense ground shaking. The worst was traditional houses which, because of their heavy brittle construction, suffered significant damage — general lower storey and complete collapses being common.

The Kobe earthquake highlighted the following problems which are equally relevant to Australia:

- structural degradation of existing building stock through lack of maintenance created a "time bomb";
- seismic risk based on "recent" history severely under-estimated the economic and social impacts of a large earthquake;
- soft soil can substantially increase the effects of earthquakes on small, brittle construction; and
- modern earthquake engineering worked well for multi-storey buildings but not applied to smaller structures such as houses and small apartment buildings - most of deaths associated with collapse of smaller domestic structures.

The Kobe earthquake clearly demonstrated the importance of ensuring all construction in soft soil areas at risk from earthquakes is ductile; small buildings as well as large. The failure of small domestic buildings due to brittle failure was a major contributor to the scale of the disaster.

It also highlighted the danger of putting too much emphasis on perceived risk based on recent history. Kobe was perceived by the Japanese as an area of lower seismic risk, and the earthquake design loads reflected this. However, this earthquake demonstrated, as did Newcastle, that soft soil amplification can be far more important than differences in perceived risk, particularly for small, non-ductile buildings.

6. REFERENCES

1. Alexander Howden, "The Great Hanshin Earthquake, Japan," Sydney, NSW, 1995.
2. Architectural Institute of Japan, "Preliminary Reconnaissance Report of the 1995 Hyogoken-Nanbu Earthquake," 1995.
3. Pham, L. and Griffith, M.C., "Report on the January 17, 1995 Great Hyogo-ken Nanbu (Kobe) Earthquake," Joint report of the CSIRO Division of Building, Construction and Engineering and Department of Civil and Environmental Engineering, Adelaide University, 1995.

EARTHQUAKE WARNING, ALARM AND RESPONSE SYSTEMS

WAYNE PECK, GARY GIBSON AND GREG MCPHERSON

ABSTRACT:

The characteristics of earthquake warning, alarm and response systems are examined and an Earthquake Preparation, Alarm and Response System developed in South East Australia to aid in the most efficient allocation of resources following the occurrence of an earthquake is described.

Paper No. 14

EARTHQUAKE WARNING, ALARM AND RESPONSE SYSTEMS

Wayne Peck, Gary Gibson and Greg McPherson

Seismology Research Centre, RMIT University, PO Box 71, Bundoora, VIC 3083

ABSTRACT

The characteristics of earthquake warning, alarm and response systems are examined and an Earthquake Preparation, Alarm and Response System developed in South East Australia to aid in the most efficient allocation of resources following the occurrence of an earthquake is described.

KEYWORDS

Risk management, earthquake warning, earthquake alarm, earthquake response, lifelines, emergency simulation.

INTRODUCTION

After an earthquake one of the first tasks for a seismologist is to determine the longitude, latitude, depth and magnitude of the earthquake. This is not necessarily the most useful information for people responsible for managing large assets or emergency services. Of more value to such authorities are answers to questions such as:

> "What are the likely effects of this earthquake?" and
> "What course of action should be undertaken?".

The Seismology Research Centre, at the request of Melbourne Water and Sydney Water, has developed a system designed to provide an earthquake alarm, damage scenario and response information after moderate or large earthquakes. Based on a rapid determination of the earthquake location and magnitude, a report is generated and provided by phone, facsimile or other means.

The Earthquake Preparation, Alarm and Response System is a risk management tool, devised to give a preliminary estimate of the potential for damage to assets in the event of a large earthquake. This assists in the efficient allocation of resources in the event of real damage, and helps to reduce speculation about possible effects of the earthquake.

SEISMIC ALERT SYSTEMS

All seismic alert systems attempt to provide information on the effects of an earthquake shortly after the event has occurred. Seismic alert systems can be classified into a number of broad categories using characteristics such as the delay between the origin time of the earthquake and the issuing of an alert, or the degreee of information contained within the alert message.

Warning systems attempt to provide a warning of the impending arrival of damaging seismic or tsunami waves. The information provided by these systems is usually simply that strong ground motion is about to occur, or that a tsunami has been generated. Warning systems try to provide this information as soon as possible after the origin time of the earthquake.

Alarm systems provide real time information regarding the occurrence of an earthquake. Usually alarm systems provide location and magnitude information during or shortly after strong motion has occurred.

Response systems usually try to provide information on the distribution and nature of strong ground motion shortly after it has occurred. Rapid response systems are a subset of this group where this information is provided within ten minutes of the earthquake occurring[1].

Combination systems Many systems combine elements of two or more of the above systems. Both the system descibed in this paper and the TriNet Project in California[2] are combined alarm and response systems for example.

There have been a number of seismic alert systems developed in other countries. In Japan, alarm seismometers have been used by Japan Railways along both the Shinkansen and conventional lines for many years[3]. More recently a seismic warning system for earthquakes generated in the Guerrero Gap has been developed for Mexico City[4]. Two early warning systems are running in Taiwan[5] and a tsunami warning system developed in French Polynesia[6] is operating there and in Indonesia. The Australian Geological Survey Organisation is also installing a tsunami warning system.

The underlying principle behind earthquake warning systems is that electronic communications travel faster than seismic waves and that the fastest seismic waves (P) travel faster than the damaging shear (S), surface waves and/or tsunami waves.

There are two main methods of providing advance warning of impending strong ground motion. The first involves the real-time telemetry of seismic data from the epicentral area to a centralised site, usually at the place for which the warning is to be issued. This method requires that the source area for damaging events is known so that the area can be instrumented, and relies on the velocity difference between the seismic waves and the telemetry media to provide adequate warning time. The second method uses telemetry from within the area for which the warning is to be issued, using the earliest arriving seismic waves to locate the event and relying on the velocity difference between the P waves and the destructive S, surface and tsunami waves to provide adequate warning time. In the case of tsunamis, because of the relatively slow speed of tsunami waves, up to several hours of warning time may be provided.

In both cases the further the earthquake occurs from the target area the greater the warning time available. The advantage of the first system over the second is that it allows for a longer pre-event warning because of the greater velocity difference between electronic telemetry media and seismic waves compared with the velocity difference between P and S waves used by the second system. However the latter sytem has the advantage of being source independant, since unlike the first system, a network of recorders near the seismic source is not required.

For either of the above methods it is assumed that the damaging earthquake will occur at some distance from the site for which the warning is to be issued. Earthquakes that occur in close proximity will give very short warning times which limits the mitigation actions able to be undertaken. However sometimes even a warning of only a second or two may be useful for shutting down critical operations.

Alarm systems use telemetry of seismic data and automated earthquake location systems to provide earthquake location and magnitude data as close to real-time as possible. Most warning systems also provide an alarm function.

Response systems attempt to look at the distribution and nature of strong ground motion following an earthquake. They do this by either direct measurement or by computation using the location and magnitude and an attenuation function.

The system described in this paper uses a computed location and magnitude with an intensity attenuation function to determine the distribution and nature of strong motion. It then relates the computed intensities to vulnerabilities of specified assets and looks at what are the most appropriate actions to undertake immediately following an earthquake. It does this by giving an accurate estimation of the likely damage and by matching a pre-designated list of tasks with intensities calculated for various assets. The estimation of likely damage is important because following a major earthquake (particularly in areas where they are uncommon) reports of damage are often erroneous or misleading, and in the confusion following a major earthquake valuable resources may not be allocated optimally. Thus the system described in this paper incorporates both the hazard and the vulnerability sides of the seismic risk equation by matching computed ground motions with a database of asset vulnerabilities.

The TriNet Project in California has a number of similarities with the system described here in that it is a combined alarm and response system, and uses alphanumeric pagers to disseminate information. It differs in that it does not take vulnerability into account and uses near real-time dial out telemetry from the seismic network to obtain a map of strong motion rather than estimating strong motion using attenuation.

SYSTEM DESCRIPTION

Figure 1 gives an overview of the elements involved in the earthquake preparation, alarm and response system developed by the Seismology Research Centre. The system combines hazard information provided by the seismologist (earthquake location, magnitude and attenuation) with vulnerability information provided by the client (asset locations, vulnerability and importance, tasks and priorities).

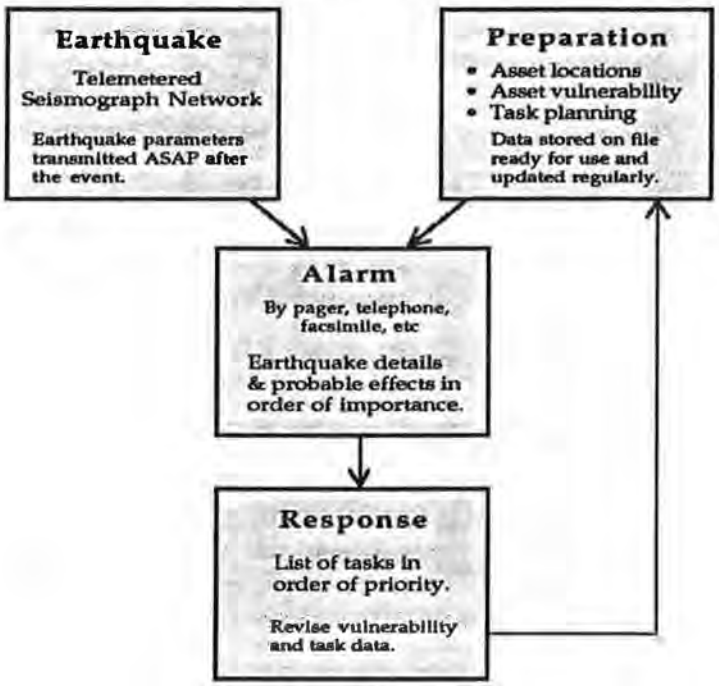

Figure 1: Overview of Elements of the system showing feedback loop.

The report generated by the system contains three sections:

The first describes the earthquake and the general outcomes of the earthquake. This includes descriptions of the expected effects likely to be observed in towns near the epicentre.

The second is specific to a particular authority. It contains descriptions, in order of importance, of the effects of the earthquake on a pre-determined list of assets for which the authority is responsible.

The final section comprises a list of tasks that should be undertaken by the staff of the authority, listed in priority order.

The alarm program works by calculating the modified Mercalli intensity for a given earthquake at each location listed in its data files. The program then looks at the tables of outcomes for each site and matches the calculated intensity to a text description for the general and specific outcomes likely to occur at that particular site for that intensity. It also matches the intensity at the site to a task list for the authority to produce a list of tasks.

Figure 2 is a flow chart showing the steps involved in the production of the three part report.

The order in which the items are listed in the report is determined by the importance of the site for the general outcomes and by a weighted importance for the specific outcomes. The task list order is determined by the priority assigned to each task.

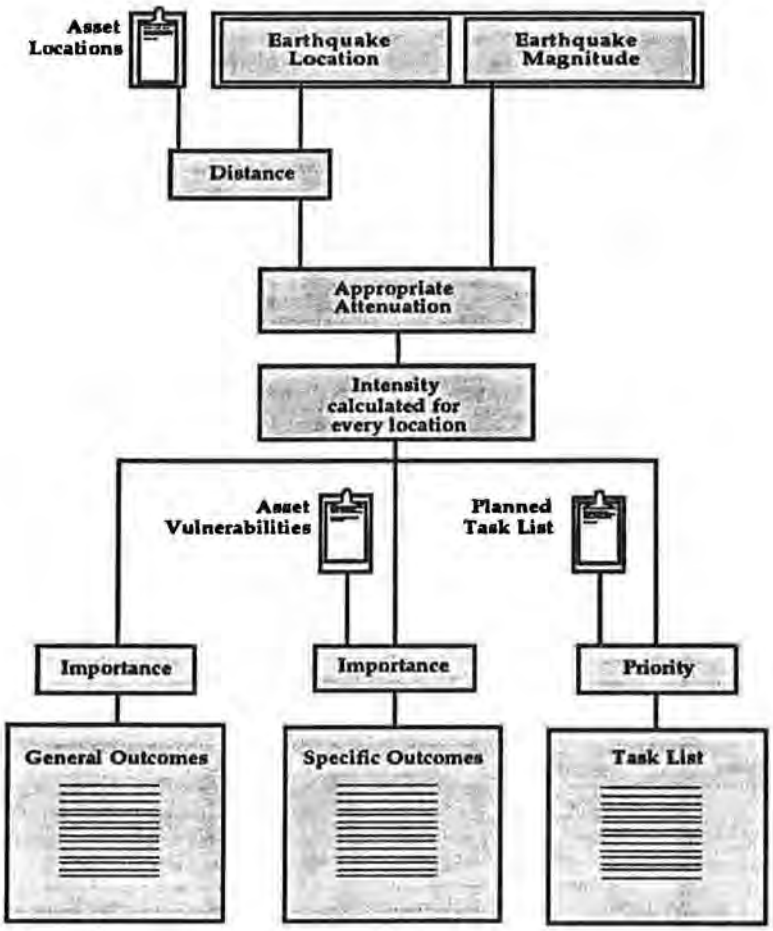

Figure 2: Preparation, alarm and response flowchart.

Data from the seismic recorders that make up the telemetered system are transmitted continuously to the SRC by radio, dedicated telephone line, or a combination of the two.

This stream of incoming data is fed to a dedicated earthquake detecting computer that digitally records any event that occurs, and alerts SRC staff of larger events via an automatic alphanumeric paging system at any time of the day or night. A rough preliminary location can be calculated by staff members from the information provided by the pager system. In addition the stream of incoming data is recorded at the centre on continuous analogue recorders so that a constant real-time visual record of seismic activity within the network is always on hand.

For calculation of a reliable location and magnitude it is necessary for staff members to either travel to the SRC office and locate the event, or for one of the staff members with a portable computer and modem to dial into the SRC and download event data and perform a location on their portable computer. It is planned to have a real time earthquake location system automated so that the pager system will also transmit a preliminary earthquake location and magnitude directly.

It is not expected that the earthquake alarm will ever be sent to users without verification by a seismologist, although some users may be interested in receiving a message to say that the alarm system has triggered on a major event, and more details will be coming soon.

RESULTS

In the two years since the system was developed there have been only a few earthquakes in southeastern Australia of sufficient magnitude to warrant operating the alarm system. For small magnitude earthquakes which are unlikely to cause any damage, the list of outcomes is obviously correspondingly small. However the output of the system for small earthquakes is still useful both as a training exercise and for early reassurance of asset managers, site staff and members of the public that the event was no cause for concern.

In the few cases where the system has been implemented, the initial earthquake location was within 5 kilometres of our final best location and the intensities computed by the program matched the observed intensities very closely.

CONCLUSION

A preparation alarm and response system has been developed to provide useful information to users regarding the likely behaviour of various assets and the appropriate actions to take following a significant earthquake. The system utilises the advantages of both distributed and centralised seismic networks[7]. Unlike earthquake alarm systems in regions where the source of the most likely damaging earthquake has been identified, this sytem does not warn of impending strong motion before the event. Rather, it aims to assist in the best allocation of resources immediately after the event. For intraplate areas such as Australia, where there is considerable uncertainty over where the next damaging earthquake may occur, a combined alarm/response system can provide useful, cost effective, information in the event of an earthquake emergency.

REFERENCES

[1] Gibson, G., 1996: "Pers Comm" *Minutes of the The International Forum on Earthquake Early Warning*. Unpublished.

[2] Heaton, T., R. Clayton, J. Davis, E. Hauksson, L. Jones, H. Kanamori, J. Mori, R. Porcella, T. Shakal, 1996: "The TriNet Project" *Proc. of the 11th World Conf. on Earthquake Eng. Mexico.*

[3] Nakamura, Y., 1996: Real-Time Information Systems for Hazard Mitigation. *Proc. of the 11th World Conf. on Earthquake Eng. Mexico.*

[4] Espinosa-Aranda, J.M., A. Jiminez, G. Ibarrola, F. Alcantar, A. Aguilar, M. Inostroza, S. Maldonado, 1996: "Results of the Mexico City Early Warning System" *Proc. of the 11th World Conf. on Earthquake Eng. Mexico.*

[5] Lee, W.H.K., T.C. Shin, T.L. Teng, 1996: "Design and Implementation of Earthquake Early Warning Systems in Taiwan" *Proc. of the 11th World Conf. on Earthquake Eng. Mexico.*

[6] Reymond, D., O. Hyvernaud, J. Talandier, 1993: "An Integrated System for Real-Time Estimation of Seismic Source Parameters and its application to Tsunami Warning" *Tsunamis in the World*, S. Tinti (Ed) Kluwer Academic Publishers, Netherlands 1993.

[7] Gibson, G., W. Peck, G. McPherson, 1996: "An Earthquake Rapid Response System Operating in South-East Australia" *Proc. of the 11th World Conf. on Earthquake Eng. Mexico.*

WHEN IS EARTHQUAKE DAMAGE NOT EARTHQUAKE DAMAGE ?

HUGH K. MOUNTFORD, KOUKOUROU ENGINEERS

Hugh Mountford has extensive experience in investigating and reporting on building failures of many kinds. He commenced work as a structural draftsman in the former Public Buildings Department but branched into consulting work in 1970 in the offices of Hosking, Fargher & Oborn, where under the guidance of Philip Fargher achieved significant experience in aspects of soil technology and of building behaviour. From 1980-1985 with R.M. Heriot & Associates, he gained further experience in relation to building inspection and the then new concept of rational design procedures for domestic footings.

From 1985 to the present, Hugh Mountford has been increasingly involved in technical reporting on building behaviour with particular emphasis on reporting to insurance companies on damage sustained by buildings from various causes, including earthquakes.

ABSTRACT: *Full paper not available

The case studies discussed have been selected to identify some of the types of damage which in the opinions of home owners have been initiated as a result of earthquake. Three of the four cases discussed were found to have no relevance to earthquake damage whatsoever, the causes being foundation soil or materials related movements. The last case study discusses the failure of a reinforced masonry rainwater tank, the failure occurring during the time period over which an earth tremor occurred. It is most likely that the tank failure did occur during or shortly after the tremor. Aspects of the construction and previous behaviour of the tank ultimately led to the insurance claim being denied despite the apparent connection in time between the earth tremor and the failure.

It is hoped that discussion of the case studies will indicate the large range of possible causes of movement that exist, and show that very careful examination and consideration is necessary to properly identify the underlying cause of building movement.

OVERVIEW OF MULTI-STOREY TIMBER FRAME CONSTRUCTION IN AUSTRALIA, JAPAN AND NORTH AMERICA

JOHN W. KEITH, JOHN KEITH & ASSOCIATES

ABSTRACT:

Around the world major cities continue to expand to meet housing shortages as the world human population rapidly continues to grow. This trend places heavy demands on governments to provide the necessary services, and to meet the increasing costs to support the infrastructure. For these reasons governments, as well as planners and developers are looking towards affordable housing that offers urban consolidation.

One alternative that is suitable for commercial and residential construction that proved to be environmentally friendly, cost effective and still maintain risk to life safety expectations in North America is Multi-Storey Timber Frame Construction (MSTFC).

The success of this form of construction in North America, especially with its ability to perform well in earthquakes on the west coast of the USA has seen it spread to other countries that experience major earthquakes such as New Zealand and Japan. It has also spread to countries that have a tradition in residential timber framing construction in Europe and more recently Australia where changes to the Building Code of Australia now allow 3-storey multi-residential timber framed construction. This paper discusses the performance and potential of this form of construction.

Paper No. 16

1 INTRODUCTION

During past decade the Australian Federal and State Governments have expressed a desire to arrest the urban sprawl in our major cities. They recognised that urban consolidation offered a less expensive option than extending basic services including transport, water, sewerage, and power.

As a result we have already seen some local governments re-zoning residential areas to allow dual occupancy and row housing on land that once contained single family houses.

In the 1980's sections of the timber industries in Australia and North America recognised the latter continent's use of multi family, Multi-Storey Timber Frame Construction (MSTFC) had market potential in Australia.

In the U.S., Canada and Japan, speed and ease of construction, design flexibility and competitive material costs have demonstrated that MSTFC has advantages over steel and concrete construction in the three to five storey range, and yet still maintains acceptable risk to life safety for the occupants.

The National Association of Forest Industries (NAFI) presented a detailed submission to the Australian Building Codes Board (ABCB) which sought approval for three storey Multi-Residential Timber Framed Construction (MRTFC) to be included in the Building Code of Australia (BCA). The submission has resulted in the BCA approving a concession to allow full timber framed construction in 3 Storey Class 2 residential buildings that they have released in Amendment 7. A fourth storey is allowed, provided the lowest storey is used for a car park or other ancillary purpose, as is constructed of concrete or masonry.

2 BUILDING CODE REQUIREMENTS

Building codes set minimum requirements. The BCA (1) states its basic objective "is to ensure that acceptable standards of structural sufficiency, fire safety, and health and amenity are maintained for the benefit of the community now and in the future." It includes in its requirements that they "be cost effective".

In the U.S. the Uniform Building Code (UBC) (2) states its purpose is "...to safeguard life or limb, health, property and public welfare...". The National Building Code (NBC) of Canada (3) describes itself as "...essentially a set of minimum provisions respecting the safety of buildings with reference to public health, fire protection and structural sufficiency."

Key areas of the above codes that impinge on the likely success of MSTFC are discussed below.

2.1 Structural Adequacy

The inherent redundancy in timber framing combined with the material's high strength to weight ratio result in a very strong yet lightweight structure, when compared to those built with concrete and masonry.

Horizontal loads generated from wind and earthquake forces are carried through shear walls and diaphragm floors at each level to the foundations.

For downward vertical loads the allowable compression of the timber perpendicular to grain generally determines the sizing and spacing of studs at ground level.

In the U.S. where MSTFC is allowed to 4 and 5 storeys in different states, 2x6, 3x4, and 3x6 studs are sometimes doubled or tripled to carry the loads within the allowable bearing stress on the timber wall plates. Bearing stress may also govern the width of the plate or the thickness of beams and joists, to ensure excessive crushing deformation does not occur.

Uplift and horizontal forces generated from either wind or earthquake are contained by steel rods and/or connectors.

2.2 Fire Safety

The objectives of fire provisions in building codes focuses on fire resistance and stability, compartmentation and separation, and protection of openings in a building when considering the fire safety of the occupants, fire fighters and the protection of the building.

2.2.1 Fire-Resisting Tested Construction

In Australia, Western Wood Products Association (WWPA) contracted the Australian Commonwealth Scientific Industrial Research Organisation (CSIRO) to perform a number of fire resistance and sound transmission tests on a range of wall and floor assemblies that were required for the NAFI submission. The FRL's determined and reported by CSIRO (4) were 60 and 120 minutes for partition walls, 60 and 90 minutes for brick veneer walls tested from the inside only, and 60 and 120 minutes for floor/ceiling systems. A summary of each test report is provided in the Appendix.

These and other assemblies tested by the timber and plasterboard industries in Australia form the basis for approved fire performance rated timber frame systems in this country.

In the U.S. and Canada, apart from having approvals for a number of tested systems, designers can create their own particular approved fire rated assembly to use in a structure, using the "Component Additive Method (CAM)". The fire resistance rating of a framed assembly is calculated by adding the time assigned to the membrane on the fire exposed side, plus the framing members, and other additional protective measures such as the inclusion of insulation.

For wood construction, North American building codes allow increases in area when sprinklers are used. The Uniform Building Code (UBC) (2) also allows increases in the number of storeys if sprinklers are installed, as well as increases in floor area for open space on two or more sides of the building. The area of a building can also be effectively increased by the use of area separation walls that regard each portion as a separate building.

In MSTF construction it is necessary to provide cavity barriers (fire and draft stopping) to all concealed vertical and horizontal draft openings.

2.2.2 BCA Fire-Resisting Construction

For Type A Fire Resisting Construction the BCA restricts the use of timber by requiring external walls to be non-combustible and loadbearing internal walls to be masonry or concrete. Where a building component supports another component which must be non-combustible, it must likewise be non-combustible.

The BCA classification for a three storey multi-residential building is Class 2, Type A construction. It must be designed to withstand total burnout of the combustible contents and building materials, with the fire restricted to the unit of fire origin.

In the worst scenario loadbearing external and separation walls require an FRL of 90/90/90, with the latter required to extend to either a fire rated ceiling or to the roof. Floors between units require an FRL of 90/90/90. There is no FRL requirement for the roof.

2.2.3 BCA Amendment 7 Fire-Resisting Construction

In processing NAFI's original submission the ABCB has supported MRTFC by way of a concession for Class 2 buildings, which has been released under Amendment 7 of the BCA. Basically Amendment 7 allows:-

> A three storey timber frame Class 2 building with an FRL criteria of 90, provided the building is fitted with an automatic smoke alarm system. If the building is fitted with a sprinkler system as well, the FRL criteria reduces to 60 for other than external loadbearing walls which remain as 90 when tested from the outside.
>
> A Class 2 building can be 4 storeys, with the top three storeys in timber frame construction, provided the lowest storey is used as a car park or other ancillary purpose and is constructed from concrete or masonry.

2.3 Sound Transmission

External noise to any residential building may be minimised by the location of the site and building on it, landscaping, erecting reflective or absorptive barriers or noise walls to block the "line of sight" to the noise source (as occurs from traffic), by the floor plan, and building construction.

A major consideration in the health and amenity of multi- residential buildings is the internal noise transmission between occupancies.

2.3.1 Noise Transmission

Noise in and around buildings is transmitted through airborne paths, or by impact and structural vibrations.

Airborne noises such as traffic, voices and music are transmitted through the air as pressure waves, inducing vibration in the walls, floors and ceilings. The effectiveness of the wall or floor-ceiling assembly in reducing noise transmission results from the difference in the vibrational energy from the induced to far side. By isolating one wall surface from the other or a floor from a ceiling, any sound that may leak through cracks or other openings is minimised.

Structure-borne noise originates from the vibrations of pipes, motor driven equipment and impact noises (such as from hard soled shoes impacting on a hard floor surface) that are not effectively isolated from the building structure. The sound will travel more easily through the building framing than through the air (and air gaps). Therefore it is essential to isolate motor driven equipment and pipes etc. to prevent a solid medium sound transmission path.

2.3.2 Building Code Requirements

In multi-residential buildings, building codes require that separating walls and floor-ceiling assemblies between occupancies provide an airborne sound insulation equal to that required to meet a certain Sound Transmission Class (STC) rating. They may also require them to have a impact sound insulation equal to that required to meet a certain Impact Insulation Class (IIC) rating.

The building codes also require any services placed in or through the separating wall and/or floor-ceiling assemblies be installed in a manner that will not reduce the required rating of the assembly.

Australia - In effect the BCA minimum STC requirements are:-

STC of 45 - Floor between units.

STC of 50 - Walls separating a bathroom, laundry or kitchen and a habitable room from an adjoining unit requires an STC of 50. Such walls must also provide a satisfactory level of insulation against impact sound.

STC of 45 - Other walls separating units.

Impact sound is to be considered, but no level is stipulated other than with equivalency with deemed to satisfy solutions that de Veer (5) states "...would permit a timber framed system".

Canada - The NBC stipulates a minimum STC of 45 for wall or floor-ceiling occupancy separations from any other space in the building from which noise may be generated. Alternatively they may have sound ratings of I or II, where Rating I signifies constructions with a STC of 50 or more, and Rating II signifies constructions with a STC of 45 to 50, for given wall, floor, ceiling and roof construction assemblies. No IIC is stipulated.

U.S.A. - The UBC requires airborne sound insulation for walls and both airborne and impact sound insulation for floor-ceiling assemblies separating dwelling units from each other, and from public space, such as interior corridors.

The STC and IIC are to be 50.

Of the three building codes, the UBC alone recognises that the STC and IIC ratings specified are for those attained by laboratory testing of the given assemblies. They allow an STC and IIC of 45 if field tested.

The UBC also stipulates entrance doors from interior corridors together with their perimeter seals have a STC of not less than 26.

2.3.3 Sound Detailing

The three building codes both indirectly and directly offer advice on detailing and construction to ensure there are no significant sound leakage openings or flanking paths. These may be summarised as follows:-

BCA: The BCA stipulates that soil and waste pipes that pass through more than one sole occupancy unit must be separated from the rooms of any sole occupancy unit by construction. The construction must have a STC of not less than 45 if the adjacent room is a habitable room, other than a kitchen which can have a STC of not less than 30. It also provides details of where access doors can be located and how they are to be constructed.

The BCA also stipulates "A flexible coupling must be used at the point of connection between the service pipes in a building and any circulating or other pump."

NBC: "Wall-to-floor connections are of particular importance, as paths may be created within the floor space that will permit noise to bypass an otherwise carefully constructed sound separation."

"Wood wall plates may shrink, warp, or otherwise separate from the sub-floor as lumber dries. Openings created in this manner can be avoided by caulking at the junction of the plate and the sub-floor."

"Problems may also arise where the wall finish is cut for the installation of equipment or service. Surface mounted medicine cabinets are preferable to those that penetrate the finish."

"Electrical outlet boxes should not be installed back-to-back but should be staggered on opposite sides of the separation so that they do not occur in the same stud space."

UBC: "Penetrations or openings in construction assemblies for piping, electrical devices, recessed cabinets, bathtubs, soffits, or heating, ventilation or exhaust ducts are to be sealed, lined or otherwise treated to maintain the required ratings."

2.4 Cost Effectiveness

At this point in time it is impossible to quantify accurately how cost effective three storey MSTF construction will be in Australia compared to the normal three storey multi-residential concrete and masonry construction until real projects are undertaken. Estimates, based on working drawings and details of construction for a prototype three storey, 12 unit (2x2 & 2x3 B/R's per level) MSTFC residential housing project, commissioned by NAFI in 1990, showed a saving of up to 20% of total construction time is possible over conventional masonry construction.

In Australia, the first approved 3-storey MRTFC housing project has just been completed for the Queensland Department of Housing, Local Government and Planning at Lutwyche, a inner suburb of Brisbane. This project contains 24 single bedroom units, in two adjacent buildings of 12 units each, with 4 units to each level.

The project was completed in just 20 weeks from when the builder took possession of the site. He said it would have taken him at least 36 weeks to build, had it been of concrete and masonry construction.

The estimated saving on construction time is consistent with the experience of U.S. builders and developers on larger projects. They noted that their holding charges on the land and construction were greatly reduced, which provided increased profits.

3 CONSTRUCTION & DESIGN DETAILS

The normal construction and design details covering shrinkage, wind and earthquake hold-down and shear connections, and detailing for durability in current two storey timber frame construction become major considerations in MSTF construction. In addition, due to risk to life safety aspects and health and amenity, greater attention needs to be given to fire and draft stopping, and sound insulation.

Another important design and construction consideration for large MSTF buildings is the protection of the wood in the building against termite attack.

3.1 Shrinkage

The shrinkage of wood must be considered in MSTFC, and be determined at the design stage, so that any necessary shrinkage of the timber framing elements, or differential movement, say with brick growth for brick veneer construction, can be taken into account.

Often designers elect to use engineered timber floor joists such as glulam beams, LVL beams, and timber "I"-beams that have solid or LVL chords and webs made from plywood or other composite wood products. These products are all manufactured as "dry" products with a MC of around 12%.

3.2 Connections

As with normal timber framing, MSTFC relies on a range of metal connectors to transfer uplift and shear loads to the foundation.

One method uses steel rods to literally bolt the frame to the foundation. The steel rods are generally set into the concrete foundation or slab at ground level, with nuts transferring the forces through bearing plates set on top of the bottom plate of the first two floors, and on top of the top plate of the third floor. Often a splice connector allows the diameter of the rod to step down at each floor level, depending on the design force.

Bolted steel brackets may also be used to anchor the frame to the foundation, for both horizontal and uplift forces. Metal straps nailed to studs tie one floor to another, effectively transferring wind uplift forces.

To optimise on the design, both internal and external framing may be braced with close nailed plywood or other approved sheathing material. Nails are also used through metal straps to reinforce the shear capacity of shear-walls around openings.

3.3 Cavity Barriers

Cavity barriers for fire and draught-stopping have been developed in North America for improving fire safety in wood-frame buildings.

Fire-stopping prevents movement of flame and gases through relatively small concealed spaces in building components such as floors, walls, and stairs, or through holes cut through walls and floors for service pipes etc. In the U.S. timber blocking, using framing timbers, is used between joists and along wall plates. Non-combustible material is used around vents, pipes, ducts, chimneys and fireplaces.

Draught-stopping prevents the movement of air, smoke gases and flames to other areas of a building through large concealed spaces, such as attics, and floor assemblies with suspended ceilings or open web trusses. In the U.S. draught-stopping materials "...shall be not less than 1/2" gypsum board, 1/2" plywood, or other approved materials...".

3.4 Termite Control

In Australia the pest control industry claim that any house, regardless of building construction material, has an even chance of being attacked by termites over its 50 year life span.

The potential for termite attack in MSTFC buildings must be considered during the design and construction of the building, and a inspection program, at least annually, should be provided by qualified pest controllers.

There are two broad means of protecting buildings from termite attack which are by providing either chemical or physical barriers, or a combination of both. Irrespective of what methods are used, regular inspections are essential.

In Australia the chemical termiticides that are currently used are organophosphates. Organochlorins, although the most effective with a service life of up to 30 years, were banned from use in Australia on 1 July 1995. The organophosphates only have an expected service life of between 3 to 5 years, therefore they must be used in conjunction with regular building inspections.

The termiticides are applied by spraying the sub-soil under concrete slabs and foundations prior to construction and around the perimeter of buildings, to provide a chemical barrier to the subterranean termites.

The traditional physical termite barriers include the provision galvanised steel sheeting "ant caps" on isolated and perimeter engaged pier footings. Their primary purpose is to cause the termites to bridge the edge of the barrier by means of a shelter tube thereby exposing their presence. They can then be poisoned.

Two recent developments to provide physical barriers on a much larger scale for new building projects include the use of a fine stainless steel mesh and the use of a crushed graded granite sand that can be placed under concrete slabs and footings. The stainless steel mesh allows moisture movement but the mesh openings are small enough to prevent the passage of termites. Similarly the graded crushed granite has particles too large for the termites to move, and voids between the particles too small for the termites to pass through.

Both methods are suitable for use with concrete slab on ground constructio. The mesh has the advantage that it need only be placed around the perimeter or as a collar for service penetrations of the slab, provided the slab is correctly designed and constructed to control the size of any cracking.

Maintenance methods for eradicating termites include blowing small amounts of arsenic dust directly into visible termite galleries and shelter tubes. As the termites pass by some of the arsenic dust sticks to their bodies. As they clean each other they digest the poison and die. The live termites carry the dead ones to their nest and eat them, and ultimately the whole nest can be destroyed.

In recent years CSIRO have developed methods for setting "food" baits to capture large volumes of termites which are then dusted with arsenic and set free to return to their galleries and ultimately their nests. The whole nest is then effectively and safely poisoned.

MSTFC construction commonly seen in the US is built above four or more levels of concrete commercial structures such as shops etc. This technique virtually eliminates the potential for termite attack, but doesn't eliminate the need for regular inspections as part of a maintenance program for the building.

4 BUILDING SYSTEMS & STYLE

The method of timber framing construction used in MSTFC is simply an extension of platform construction primarily used in two storey timber frame construction . The floor of each storey forms the platform upon which its frame and the next floor, and finally the roof system is erected.

Either on site (stick built), or prefabricated floor systems, wall frames and roof trusses, or a combination of both can be used. A principal advantage of this type of construction is its speed of erection, and the fact that the roof can be put in place once the basic frame is erected allowing all weather construction during fit- out.

A number of MSTFC projects are to be shown in the presentation. Two projects, one from the US and one from Australia, are discussed in detail below.

4.1 North American Case Study

A large 3 & 4 storey MSTFC project, known as the Delancey Street Foundation Triangle was constructed adjacent to the city side of the bay in San Francisco near the Embarcadero Freeway overpass in 1989. It was nearing completion in October 1989 when a severe earthquake measuring 7.1 on the Richter-scale struck, causing severe damage to the freeway overpass, where several spans collapsed. The Delancey Street project suffered no damage, not even a crack to the plaster.

The Delancey Street Foundation built the centre and run innovative and highly successful rehabilitation programs for drug abusers and alcoholics. Much of the complex was built by the inmates under training programs.

There are seven three and four storey MSTF buildings in the complex totalling 30,200m^2 built over one storey of parking facilities for 138 vehicles and/or retail space.

The complex contains four residential buildings providing 177 living units, a central court yard, a health club, pool, 500-seat assembly hall, and a recreation building with a 150-seat screening room. In addition it has dry cleaning, carpentry and auto repair shops, as well as a 400-seat restaurant.

It was designed to the 1979 UBC, with 1984 San Francisco additions.

4.2 Australian Case Study - Australia's First Approved MRTFC Project

Following participation in a WWPA MSTFC Technology Transfer Study Tour to the USA, developers Pacific Coast Projects approached the Queensland Department of Housing, Local Government and Planning (QDHLG&P) to develop a three story timber frame housing project, which was approved just prior to Amendment 7.

4.2.1 Design Aspects

The 24 unit public housing project comprises two related buildings each containing 12 one-bedroom units, on a 3,394 m^2 site zoned RB4, at Lutwyche, an inner northern suburb of Brisbane.

Due to an 8m fall along the site frontage of 100m, the buildings are stepped to minimise site excavation, and are mirror imaged to avoid uniformity and to produce a more interesting street facade and profile. Carparking is provided as separate open air parking areas at the rear of the site, on a one car per unit basis negotiated with Brisbane City Council.

The three storey height of each building minimised site coverage to 15% and maximised views west over parklands to Kedron Brook. Plot ratio was .44. Use of pitched Colorbond roof overhangs, deep balconies, and hoods to lower level windows minimised sun penetration and added interest to the street facade, keeping the new buildings in context with the regional Brisbane character of the suburb.

The buildings are not identical in appearance due to subtle variations in treatment of entrance porches, balcony fronts and colour schemes, but share common design and construction genes, making them cousins rather than twins.

Typical unit plans meet QDHLG&P guidelines for floor areas and fit-out, with ground floor units of 52 m^2 and upper floor units of 55m^2. The difference in floor areas is due to the need to provide a ground floor entrance and passage from the street porch to the rear staircase. Pairs of units are duplexed around each stair, allowing a floor plan which gives maximum cross ventilation and minimum overlooking or loss of privacy.

The construction methods utilised techniques already adopted in the United States modified to suit local Codes, using a mix of local and imported timber. Technical assistance was provided by both TRADAC and WWPA, who followed the progress of the project closely in conjunction with the design team. Design Architect was Bill Heather, now of The Buchan Group, and consulting engineers were Morgan Fox.

The project required considerable research and innovation by the development team to meet cost parameters set by the Department.

4.2.2 BCA Requirements for the Project

The three storey residential buildings are Class 2 type A construction, with a concession to allow timber framing.

Automatic smoke detectors are to be installed, and since sprinklers are not to be used the fire ratings are:-

- # walls between units - FRL 90/90/90
- # floors - FRL 90/90/90
- # external walls* - FRL 90/60/30
  * External walls are more than 3m from fire source feature.

The ceilings provide a 60 minute resistance to incipient spread of fire, thus the roofs do not require any FRL.

Sound transmission requirements are satisfied with minimum STC 45 in the walls and floors between units, and STC 50 where habitable rooms back onto a laundry or bathroom.

4.2.3 Construction Details

Floors consist primarily of 190 x 45 F8 seasoned softwood joists at 450 centres, with 19mm thick particleboard flooring .

Ceilings below floors utilise two layers of 16mm thick "CSR Firechek FR 90" plasterboard mounted on resilient furring channels fixed to the underside of the joists, to achieve the required 90/90/90 FRL.

Walls are framed using unseasoned F7 Douglas Fir (Oregon).

First storey (ground floor) studs are 100 x 50 @ 600 centres, whilst second and third storey studs are 75 x 50 @ 600 centres.

Double studs with a 30mm cavity between them are used for walls separating units and bounding passages, to achieve the BCA ratings for fire and sound. These walls are lined on each side with 2 layers of 13mm thick fire rated plasterboard, with 50mm acoustic insulation on the inside of one frame.

The above systems have been tested and certified to achieve an FRL of 90/90/90 and a STC of 61.

5 CONCLUSION

Based on experiences in North America and Japan, and as our building code continues to move towards performance criteria, MRTFC should play a vital role towards housing our people as the community at large recognise the positive benefits of using timber in building construction.

REFERENCES

1. Building Code of Australia (BCA), (1990), Australian Uniform Building Regulations Coordinating Council (AUBRCC). AUBRCC was replaced by the Australian Building Codes Board (ABCB) in December 1993.

2. Uniform Building Code (UBC), (1988), International Conference of Building Officials.

3. National Building Code of Canada (NBC), (1985), Associate Committee on the National Building Code, National Research Council of Canada.

4. Confidential reports by CSIRO to Western Wood Products Association, (1992), re Fire Resistant Tests on Loadbearing Partition and External Brick Veneer Walls, and Floor/Ceiling Systems.

5. de Veer, R., Nassau, P., (August 1993), "Regulatory Issues Relating to the Implementation of MSTF Projects in Australia - Presentation to Western Wood Products Association", (Unpublished).

6. U.S. Wood Handbook: (1972), "Wood as an Engineering Material", Forest Products Laboratory, Forest Service, U.S. Department of Agriculture.

7. National Association of Forest Industries, (1995), Multi-Residential Timber Framed Construction, MRTFC 3, Structural Engineering Guide for Class 2 and 3 Buildings up to 3 Storeys.

ACKNOWLEDGMENTS

I would like to thank the Queensland Department of Housing, Local Government and Planning, Pacific Coast Projects, and the architectural and engineering consultants for the project, The Heather Group and Morgan Fox respectively, for the opportunity to report on the Lutwyche MRTFC project.

I especially wish to thank Mr Bill Heather, Principal Architect for the project, and now with The Buchan Group for assisting with the material discussing the Lutwyche Three Storey Timber Frame Pilot Demonstration Project, and for permission to reproduce their material used in the paper.

APPENDIX 1

SHRINKAGE DETERMINATION

It is well documented that longitudinal shrinkage in the common framing timbers is very small, and generally ignored. The U.S. Wood Handbook (6) states that it can range from 0.1 to 0.2% from green to oven dry conditions. This equates to an average longitudinal shrinkage coefficient of $C_L = 0.00006$ per 1% change in moisture content (MC).

On the other hand it notes that wood shrinks mostly in the tangential direction of the annual growth rings, and about one-half across them in the radial direction. Since the grain orientation of the timber supplied is mostly mixed, an average shrinkage coefficient is generally adopted by designers.

For coastal Douglas Fir, using their green to oven dry moisture contents, this equates to an average coefficient $C_A = 0.0026$. For mixed Western softwoods, a coefficient of $C_A = 0.002$ is adopted.

The NAFI MRTFC 3 Structural Engineering Guide (7) tabulates estimates of shrinkage for various types of timber frame construction.

In the US designers generally calculate the estimated total shrinkage of their structures using the following equation:-

$$\mathbf{S = D \times M \times C}$$

Where S = shrinkage, mm.
D = actual timber dimension, mm.
M = change of moisture content, %.
C = shrinkage coefficient

Separate calculations are made and totalled whenever the "M" &/or "C" variables change. It is assumed that both the MC of the timber used, and the final equilibrium moisture content (EMC) of the building in service is known or can be reasonably estimated.

Example: A three storey MSTF residential building is to be constructed on a concrete slab. Coastal Douglas Fir is used throughout. The nominal 250 x 50 F8 joists are supplied dry, the wall plates and studs are unseasoned partially dry (say MC 20%), nominal 100 x 50 and 150 x 50 F7. The EMC of the building is estimated to be 8% in service.

Assume 3 plates per storey:-

Plates, nominal 50mm thick;
(2", 1/8"off) = 47mm.

D = 47 x 9 = 423mm
M = 20 - 8 = 12%
C_A= 0.0026
S = 423 x 12 x 0.0026 = 13mm

Joists, dressed 250mm deep;
(10", 3/4"off) = 235mm.

D = 235 x 2 = 470mm
M = 15 - 8 = 7%
C_A= 0.0026
S = 470 x 7 x 0.0026 = 9mm

Studs, 2.9m long.
D = 2900 x 3 = 8,700mm
M = 20 - 8 = 12%
C_L= 0.00006
S = 8,700 x 12 x 0.00006 = 6mm

Estimated total shrinkage: S_T= 13 + 9 + 6 = **28mm**